OPERATION MANUAL

Frequency converter VECTOR-100 series

Study this operation manual before installation, commissioning, operation, maintenance and repair of the frequency converter. Study all safety instructions and precautions before operating the frequency converter.

Table of Contents

1 Safety information . . . 3
1.1 Safety rules . . . 3
1.2 Important information . . . 4
2 Quick start guide. . . . 5
2.1 Unpacking . . . 5
2.2 Delivery scope . . . 6
2.3 Decoding the item code . . . 6
2.4 Nameplate. . . . 6
3 Technical information . . . 6
3.1. Sizing the frequency converter . . . 6
3.2 Model range . . . 6
3.3 Technical data . . . 7
3.4 Applications . . . 8
3.5 Overall, connection, and installation dimensions . . . 8
4 Installation of the frequency converter . . . 12
4.1. Mechanical installation . . . 12
4.2 Electrical installation . . . 13
4.3. EMC compliance . . . 17
5 Frequency converter operation . . . 18
5.1 Control panel . . . 18
5.2 Function codes and configuration . . . 18
5.3. Initial start up . . . 19
5.4 Error mode . . . 19
5.5 Standby mode . . . 19
5.6 Running mode. . . . 19
5.7 Password protection. . . . 19
6 Programmable settings . . . 19
6.1 Primary functional settings . . . 19
7 Settings description . . . 32
7.1 Group F0: basic settings . . . 32
7.2 Group F1: Start and stop control. . . . 37
7.3. Group F2: Electric motor settings . . . 39
7.4 Group F3: Vector control settings . . . 40
7.5 Group F4: U/f control parameters. . . . 42
7.6 Group F5: Input terminals . . . 44
7.7 Group F6: Output terminals. . . . 51
7.8 Group F7: Display and control panel. . . . 54
7.9 Group F8: Additional functions . . . 56
7.10 F9: PID control . . . 62
7.11 Group FA: Errors and protection . . . 65
7.12 Group FB: Additional features for winding machines: wobble, length and pulse counters . . . 70
7.13 Group FC: ModBus RTU communication settings . 71
7.14 Group FD: Multi-step mode and sequential PLC . . 72
7.15 Group FE: Torque control settings . . . 75
8 Quick setup guide . . . 78
8.1 Resetting converter settings and adding engine parameters. . . . 78
8.2 Connecting multiple motors . . . 78
8.3 Control by external input . . . 79
8.4 Switching between manual and automatic modes . 79
8.5. PID pressure control . . . 80
8.6. PID temperature control . . . 80
9 Communication Protocols: MODBUS RTU . . . 81
9.1 Protocol info . . . 81
9.2 Application . . . 81
9.3. System connection . . . 81
9.4 Connection diagrams . . . 81
9.5 Protocol description . . . 81
9.6 Communication data structure . . . 82
9.7 Command code and communication data description. . . 82
9.8 Communication group settings (Group FC) . . . 85
10 Troubleshooting . . . 86
10.1 Error codes and troubleshooting . . . 86
10.2 Common errors. Troubleshooting. . . . 88
11 Maintenance . . . 89
11.1 Routine inspection . . . 89
11.2 Periodic maintenance . . . 89
11.3. Parts replacement. . . . 89
11.4 Converter storage. . . . 89
12 Recommended auxiliary equipment. . . . 90
12.1 Auxiliary electrical equipment selection . . . 90
12.2 Connecting auxiliary equipment . . . 90
12.3 Auxiliary equipment info . . . 90
13 Warranty and post-warranty obligations . . . 90

1 Safety information

The following safety code and warning symbols are used throughout the manual:

	DANGER! Indicates a potential hazard that could lead to serious injury or death.
	ATTENTION! Indicates a potential hazard that could result in minor injuries or equipment damage.

Follow all safety instructions and precautions described in this section of the document during installation, commissioning and maintenance of the system.
The company shall not be held liable for any damages and losses in the event of failure to comply with any safety instructions and precautions.

1.1 Safety rules

	Before installation
	Do not use a frequency converter that is faulty or missing parts. Use an electric motor with Class B insulation or higher.
	Handle with care, avoid damaging the frequency converter. Do not touch terminals and connectors.
	Mounting
	The frequency converter should be mounted on a non-combustible surface, e.g. a metal sheet. Do not place or store flammable materials in the vicinity of the frequency converter. Do not unscrew the install screws, especially those marked in RED.
	Frequency converter must be protected from vibration and direct exposure to sunlight. When installing two or more frequency converters in a single enclosure, ensure proper spacing to enable proper cooling air circulation. (see Section 4).
	Connection
	Work must be performed by qualified personnel. Install an appropriately sized circuit breaker between the frequency converter and the power supply. Before making any connections, make sure the converter is disconnected from power supply and that the capacitors are fully discharged.
	Make sure the frequency converter is properly and reliably grounded.
	Do not supply voltage to terminals U, V, W. Pay attention to terminal designations to ensure a correct wiring. Make sure the electrical circuit meets the EMC requirement and work area safety standard. Carefully study the manual prior to making any electrical connections. 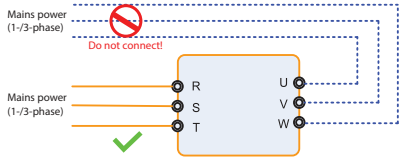 Do not connect the braking resistor across (+) and (-) terminals of the DC bus. Connect communication bus using shielded cables with at least one of the two ends of the shield grounded.
	Before supplying power
	Verify that the supply voltage corresponds to the rated voltage of the frequency converter and the connection of the supply cable is correct. Otherwise, the frequency converter may malfunction. Make sure the converter cover is closed before applying power. Do not perform high voltage tests (using megohmmeter, etc.) with the converter connected. Disconnect the electric motor cable from the frequency converter before performing the tests.
	Before supplying power to the frequency converter, make sure that the converter cover is closed. Follow the wiring diagram in this manual for connecting auxiliary equipment to the frequency converter.
	After energizing the device
	Do not open the frequency converter cover after energizing the device. Do not touch the frequency converter or any part of the electrical circuit connected to it with wet hands. Do not touch any frequency converter terminals. Once the power is supplied to the frequency converter, it will automatically test the safety of the connected power circuit. Do not touch terminals U, V, W and/or motor terminals during the automated test.
	Frequency converter settings should only be modified by qualified personnel.

Operation	
	Do not touch the ventilation system and external braking resistor with your hands to check their temperature. Only qualified electrical personnel is allowed to check for signal presence while the frequency converter is in operation.
	Make sure that no foreign objects get into the frequency converter case while it is in operation. Do not switch input power more than once every 15 minutes, as this can lead to equipment failure. If possible, avoid installing a contactor upstream of the converter input to avoid frequent uncontrolled switching.
Maintenance	
	Do not perform maintenance on the equipment while the power is connected. Repair and maintenance of the converter should only be carried out by qualified personnel who have undergone specialized training. Settings should be adjusted only after installing the converter; all auxiliary equipment should be installed with the power off.

1.2 Important information

Motor insulation resistance test

In order to avoid damage to the converter due to faulty motor windings insulation, during the initial start up, after converter or motor replacement, or after prolonged storage, or prolonged idle time, perform the motor windings insulation resistance test. During the insulation resistance test keep motor cable disconnected from the converter.

Motor thermal protection

If the motor rating does not correspond to the rating of the frequency converter, especially when the rated power of the converter is higher than the rated power of the motor, make sure that the motor is protected by appropriate frequency converter settings or that it is fitted with a thermal overload relay.

Operating at frequencies higher than the rated frequency of the electric motor

Frequency converter can operate at output frequencies from 0 to 600 Hz. If, an output frequency above 50 Hz becomes necessary, special attention must be paid to how it will affect the rotor speed and the machine driven by the motor.

Mechanical equipment vibrations

At certain output frequencies, mechanical resonance can act on the motor and the mechanical equipment connected. Resonance cascade can be avoided by limiting the operating frequency of the converter.

Motor noise and operating temperature

Since the output voltage of the converter is pulse width modulated (PWM) and contains harmonics, it may potentially lead to higher operating temperature, noise and vibration of the motor, compared to direct mains connection.

Surge suppressor or PFC capacitor at the output of the converter

Since the output voltage of the frequency converter is PWM, a PFC capacitor or surge suppressor installed at the output of the converter may lead to momentary overcurrent that can damage the converter. Do not install such devices between the frequency converter and the driven motor.

Switching devices - contactors at input and output

If a contactor is installed between the power supply and the input terminals of the converter, do not use this contactor to switch the power circuits of the converter. If the use of the contactor between the power supply and the converter is mandated by project requirements, make sure that the contactor never switches more often than once every 15 minutes. Frequent charging and discharging may reduce the life of capacitors. If a contactor is installed between the output terminals of the converter and the input of the motor, make sure that it switches only when the converter is not outputting voltage. Otherwise, the converter may be damaged.

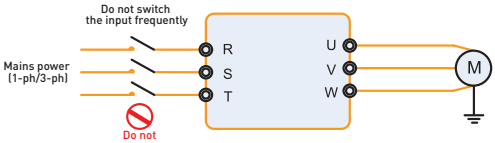

Incorrect voltage

Do not operate the converter at a voltage outside of the input voltage range, as this may damage the internal components of the converter. If necessary, use a corresponding device to to increase or decrease voltage to appropriate levels.

Switching from three-phase to single-phase power supply

Do not modify a three-phase converter into a single-phase converter. This will damage to the converter.

Lightning protection

VECTOR model range of frequency converters is equipped with a standard lightning protection device. However, if you are located in an areas affected by frequent thunderstorms, use an additional lightning protection device upstream of the converter.

Altitude de-rating

At altitudes above 1000 meters, the heat dissipation of the converter may be reduced due to thinner air. Therefore, altitude-related frequency converter power and current de-rating should be taken into account when sizing the converter.

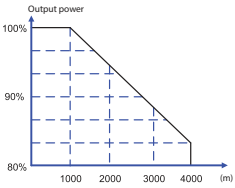

Disposal guidelines

If incinerated, electrolytic capacitors and control board may explode. Burning plastic may emit toxic gases. Please ensure that the frequency converter is disposed of as industrial waste according to local regulations.

Compatible electric motors

- Frequency converters are designed to be used in tandem with squirrel-cage induction motor. Otherwise, use rated current of the motor as the guideline for sizing the frequency converter.

- If standard forced air cooling arrangement is used, cooling at lower RPMs may be reduced. Therefore, we recommend to either use independent motor cooling arrangement or use a larger fan.
- By default, the frequency converter is set up for use with a standard squirrel-cage induction motor. During initial startup, input the motor data, as specified below, and run autoconfig to determine the correct settings for the connected motor.
- A short circuit in cabling or a motor may cause injury or damage to the equipment. Therefore, an insulation resistance and short-circuit test should be performed for the motor and cabling. Perform these tests before the initial startup and during each routine maintenance. Disconnect the equipment from the frequency converter prior to performing the tests. The recommended testing voltage is twice the voltage of the converter DC bus, 1400 V with the supply voltage of 380 V.

2 Quick start guide

2.1 Unpacking

Keep the quick start guide at hand throughout the installation of the frequency converter. Perform motor start/stop from the control panel of the converter.

ATTENTION!
For mechanical and electrical installation of VECTOR-100 frequency converters, please refer to sections "Technical information" and "Installation of the frequency converter".

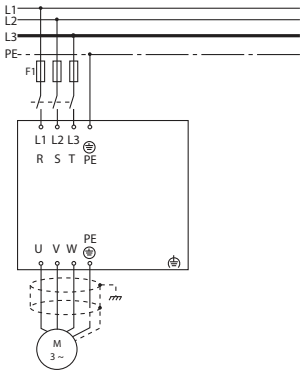

Mechanical installation

Prepare the mounting holes according to dimensions provided in Section 3 below. Install the frequency converter on the wall. Tighten all fastening screws.

Installation of power lines

Connect the power supply cables to terminals R/L1, S/L2, T/L3 of the frequency converter and the PE terminal to the protective earth system.

Connect the shielded cable from the electric motor to the U, V, W and PE terminals of the frequency converter. Make sure the cable shield has an electrical connection to the earthing terminal of the frequency converter.

Settings

The frequency converter settings can be modified from the control panel.

Press the "PROG" button on the display, a first level of settings menu will be displayed. Scroll between groups of settings by pressing "▲" and"▼" arrow buttons.

To go into motor settings, use buttons "▲"/"▼» to select group F2 and press «PROG».

By going through F2 group of settings, modify them to correspond to the connected motor. To move the cursor, press the left arrow button. To save the value, press "ENTER".

Settings for initial motor setup

F2-01: rated motor power, kW

F2-02: rated motor voltage, V

F2-03: rated motor current, A

F2-04: rated motor frequency, Hz

F2-05: rated motor rotation speed, rpm

Enter the values corresponding to the motor nameplate. Exit to the main menu by double pressing "PROG".

Starting the electric motor

Press the "RUN" button to start the motor. Set the motor speed using the potentiometer dial.

Check whether the direction of rotation matches the direction shown on the display. The direction of rotation can be changed by swapping two phases in the motor cable. Press the "STOP" button to stop the motor.

Perform motor autoconfig as per section 8.1 of this operating manual.

Check for following during the unpacking of the frequency converter:

Control check	Method
Make sure this is the converter you've ordered.	Check the converter nameplate
Make sure there is no damage	Inspect the converter from all sides to make sure it was not damaged in transit.
Make sure all exposed fasteners are secure	Check with a screwdriver. If necessary, tighten until secure.
Check for correct delivery scope	Use Delivery Scope section of the technical and/or operating manual to check for completeness.

If you find any damage to the converter or an auxiliary device, please contact your local EKF representative.

2.2 Delivery scope

Standard contents of the converter delivery:

1. Frequency converter
2. External operator panel
3. External operator panel ribbon cable
4. External operator panel mounting frame
5. Operation manual
6. Technical manual

2.3 Decoding the item code

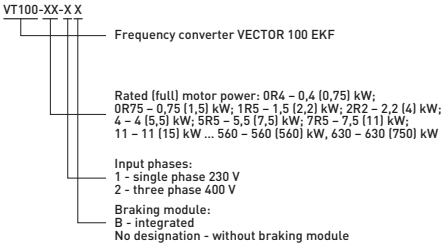

Figure 2-1 Frequency converter item code structure

2.4 Nameplate

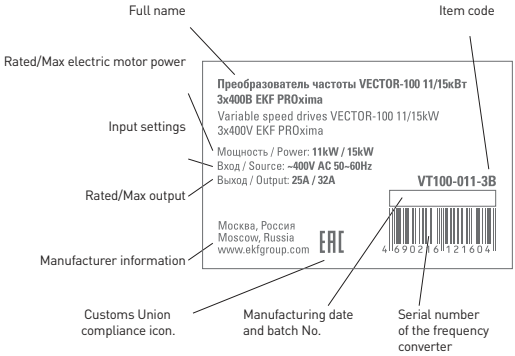

Figure 2-2 Nameplate

3 Technical information

3.1. Sizing the frequency converter

VECTOR-100 frequency converters can operate in various load modes.

The main types of industrial load are: linear torque, where the torque depends linearly on the rotation speed (conveyor, turntable, tension roller), and quadratic torque, where the torque has a square dependence on the rotation speed (pump/fan). The specifications of frequency converters contain two types of power and rated current, for linear and quadratic loads, respectively. **Frequency converter size should be selected by the rated current for the corresponding type of load, and not by the nameplate motor power.**

The rated current value should be compared with the value from the corresponding column in the table.

As a rule of a thumb, the rated power of a converter for a quadratic load is equal to the rated power of the next size converter for a linear load.

3.2 Model range

Table 3-1. Models and technical data.

Model	Rated motor power		Rated input current (A)	Rated output current, linear load (A)	Rated output current, square load (A)
	kW	hp			
VT100-0R4-1(B)	0,4	0,5	5,4	2,5	4
VT100-0R7-1(B)	0,75	1	9,3	4	7
VT100-1R5-1(B)	1,5	2	15.7	7	9,6
VT100-2R2-1B	2,2	3	24	9,6	13
VT100-0R7-3(B)	0,75	1	3,4	2,8	4,2
VT100-1R5-3(B)	1,5	2	5	4,4	5,5
VT100-2R2-3B	2,2	3	6,5	5,8	9,5
VT100-4R0-3B	4	5	11	10	13
VT100-5R5-3B	5,5	7,5	14,6	13	17
VT100-7R5-3B	7,5	10	20,5	17	25
VT100-011-3B	11	15	26	25	32
VT100-015-3B	15	20	35	32	37
VT100-018-3B	18	23	38	37	45
VT100-022-3B	22	30	46,5	45	60
VT100-030-3B	30	40	62	60	75
VT100-037-3B	37	50	76	75	90
VT100-045-3B	45	60	92	90	110
VT100-055-3B	55	75	113	110	152
VT100-075-3B	75	100	157	152	176
VT100-090-3	90	125	180	176	210
VT100-110-3	110	150	214	210	253
VT100-132-3	132	175	260	253	304
VT100-160-3	160	210	310	304	340
VT100-185-3	185	250	365	350	380
VT100-200-3	200	260	385	380	423
VT100-220-3	220	300	430	426	465
VT100-250-3	250	330	485	465	520
VT100-280-3	280	370	531	520	585
VT100-315-3	315	420	620	585	650
VT100-350-3	350	470	665	650	725
VT100-400-3	400	530	785	725	820
VT100-450-3	450	600	880	820	900
VT100-500-3	500	660	960	900	1000
VT100-560-3	560	750	1050	1000	1100
VT100-630-3	630	840	1130	1100	1200

3.3 Technical data

Table 3-2. Technical data.

Input	
Input voltage, V	1AC/3AC 220-240 ± 15%, 3AC 380-460 ± 15%
Input frequency, Hz	47-63
Output	
Output voltage	100% of rated input voltage
Output frequency, Hz	0-600
Control	
Control Mode	U/f control, vector control, torque control
Frequency accuracy	Digital setting: 0,01 Hz Analog setting 0.05% (full scale)
Frequency setting	Digital input, analog input, pulse input, multi-step speed mode and sequential PLC, PID controller, etc. Frequency settings can be combined and switched in different modes.
Overload capacity	150% for 120 s, 180% for 3 s
Starting torque	0,5 Hz/150% (vector control), 1 Hz/150% (U/f)
Speed range	1:100 (vector control), 1:50 (U/f)
Speed accuracy	±0,5% (vector control)
Carrier frequency	1.0 - 16.0 kHz, automatic control by temperature and load level
Frequency accuracy	Digital setting: 0,01 Hz Analog setting: 0,05% (full scale)
Torque boost	Automatic or manual 0,1-30%
U/f curve	Linear Custom (three points) Quadratic Exponential, power of 1,2, 1,4, 1,6, 1,8
Acceleration/ Deceleration	Linear and S-curve; 4 timing options for acceleration and deceleration, Acceleration time range: 0,0 - 65000 s;
DC braking	DC braking available when starting and stopping within the frequency range: 0,0 Hz – max. frequency; stop time: 0,0 - 100 s
FUNC mode	FUNC frequency: 0.0 Hz – upper frequency limit FUNC acceleration/deceleration time: 0,1 s - 6500 s
Sequential PLC and step speed control mode	16 steps switchable by serial PLC or digital input terminals
Built-in PID controller	The built-in PID controller provides closed-loop control of frequency-dependent parameters such as pressure, temperature, flow, etc.
Automatic voltage control	Automatically maintains output voltage when input voltage fluctuates

Table 3-2 continued.

Control functions	
Universal DC bus	A single DC bus can be utilized by several converters simultaneously for automatic load balancing
Torque control	Torque control without feedback sensor
Torque limiter	In operation, torque is automatically limited, to prevent shutdowns due to overcurrent
Frequency oscillation	Frequency can be set to oscillate in a triangular wave. Can be used for speed control of winding machines (e.g. in textile industry)
Operating time, length traveled, pulse counter	Additionally settings can be used to operate the converter based on total operating time, length of material wound on the motor-driven shaft, or pulse signal from a sensor.
Overvoltage and overcurrent protection	During operation, current and voltage are automatically adjusted to avoid damage to equipment due to overvoltage or overcurrent.
Fault protection	Over 30 built-in protection algorithms: overcurrent or overvoltage, undervoltage, phase loss, overload, short circuit, etc. Detailed operation and fault logs. Frequency converter can be configured to automatically return to operation after shutdown.
Input/output terminals	
Input terminals	See connection diagram
Output terminals	See connection diagram
Communication terminals	RS-485 interface, MODBUS-RTU protocol
Human-machine interface	
LED display	Displays settings, e.g. selected frequency, actual frequency, output voltage, output current, etc.
Multifunctional button	Functions of the "BACK/FUNC" button are user-configurable
Environmental data	
Operating temperature	-10°C – +50°C. At temperatures above +40°C and up to +50°C please account for the decreased output. For each increase in temperature by 1°C, account for a 4% decrease in the output parameters of the converter.
Humidity	90%, non-condensing
Altitude above sea level	≤1000 m: rated output power; >1000 m: reduced output power
Storage temperature	-20°C – +60°C
Storage conditions	Indoors, away from direct sunlight, dust, corrosive and flammable gases, oils, vapors, droplets and salt

3.4 Applications

Primary application areas of VECTOR-100 frequency converters

Pump and fan drives. Typically, most applications will be based on maintaining pump or fan/compressor operating parameters dependent on motor speed using an internal PID controller (see p. 8.6). Selection of an appropriate FC is done based on the rated current of the motor. If the application does not require forced braking, an FC without an integrated braking module is suitable. When configuring the FC, make sure to select the U/f curve type in F4-00 appropriate for your load type.

Conveyor and tension rollers drive. This type of load supports both scalar and vector modes. In vector mode, you can maintain additional fine control over the torque of the motor or maintain the tight tension range on the rollers. Typically, this application requires active motor braking, and therefore it is worth considering a model with an external or integrated braking module and selecting a braking resistor that matches the load. Additional functions include constant torque, revolution counter integration, wound length calculation and frequency wobble; these functions are described in-depth in the the FE settings group.

Lifting and hoisting equipment. VECTOR-100 converters are not designed to be used in lifting and hoisting applications due to the limitation of the braking current, which must not exceed the peak current of the converter and the lack of brake control algorithms. Therefore, we recommend using specialized converters for lifting and hoisting mechanisms. If, nevertheless, you have decided to use the VECTOR-100 as the drive of a lifting or hoisting mechanism, please upsize the frequency converter by +2 steps on the selection chart, using the rated current of the motor as the base, and make sure that appropriately sized braking module and braking resistors are included into the design. When configuring the converter, make sure that the motor and vector mode settings are correct, and that the autoconfig has been performed successfully.

3.5 Overall, connection, and installation dimensions

The pages that following pages contain overall and installation dimensions of the converters, detachable control panels and frames for their installation, depending on the power range of the converters.

0,4-7,5 kW

Operator panel dimensions, mm

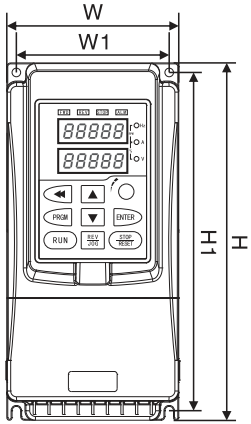

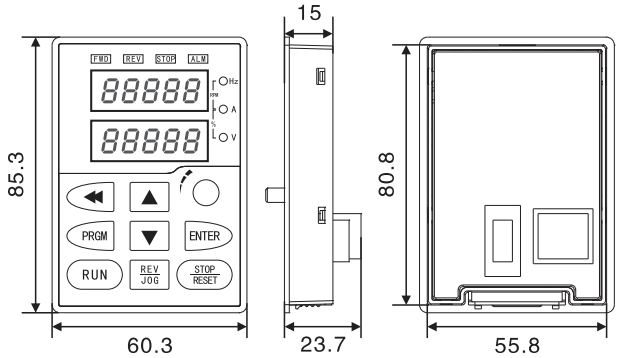

Operator panel frame dimensions, mm

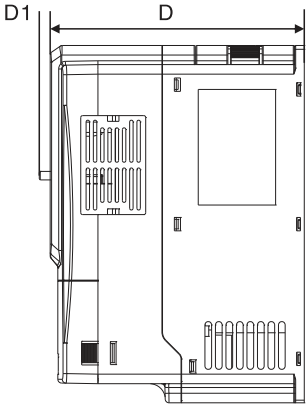

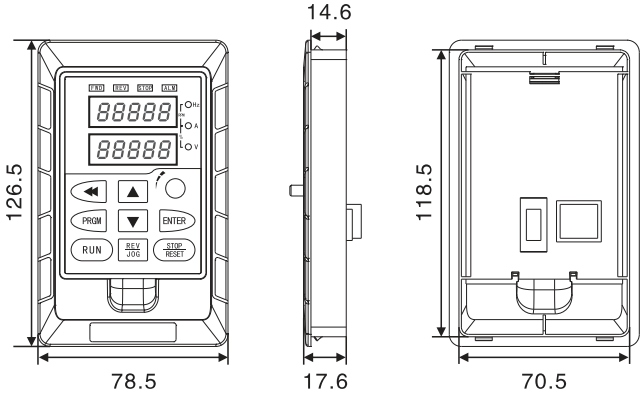

Table 3-3

Model	W, mm	W1, mm	H, mm	H1, mm	D, mm	Mounting opening, mm	Weight, kg
0,7-2,2 kW	90	80	187	177	133	5,7	1,5
4 kW	100	90	207	197	142	5,7	3,5
5,5-7,5 kW	130	115	247	236,5	162	5,7	3,5

11-22 kW

Operator panel dimensions, mm

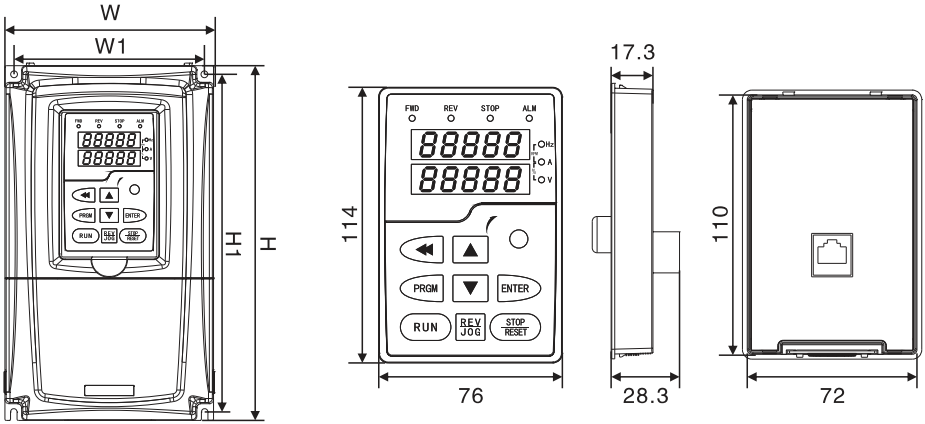

Operator panel frame dimensions, mm

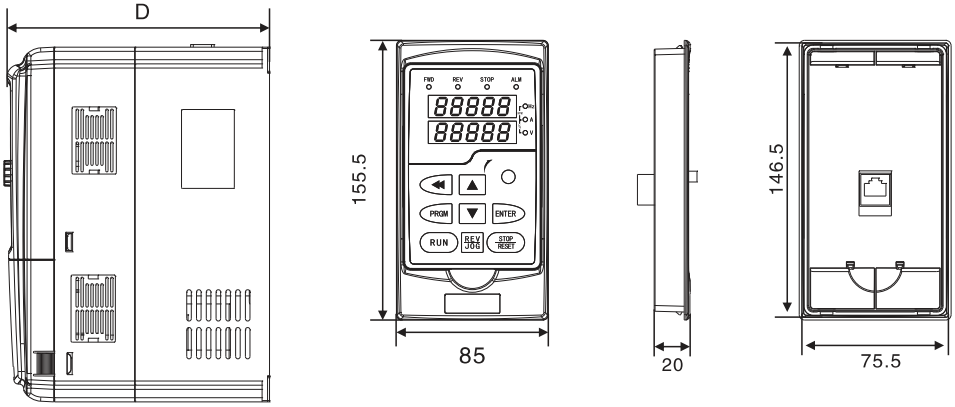

Table 3-4

Model	W, mm	W1, mm	H, mm	H1, mm	D, mm	Mounting opening, mm	Weight, kg
11-15kW	160	146	272	259	201	7	4,6
18-22 kW	211	196	313	299	202	7	7

over 30 kW

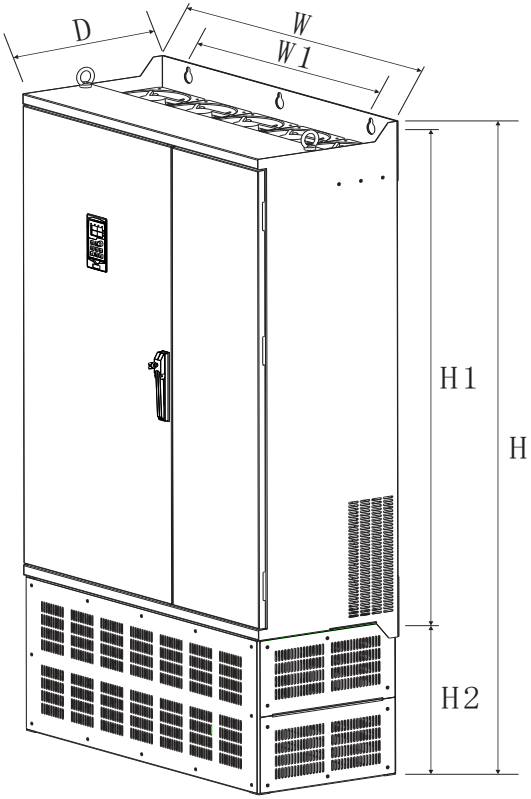

Table 3-5

Model	W, mm	W1, mm	H, mm	H1, mm	D, mm	Mounting opening, mm	Weight, kg
30-37 kW	252	201	418	399	206,9	9	13
45-55 kW	299	240	603	581	276,7	10	25
75-110 kW	338	280	643	619	312	10	39
132-200 kW	410	320	803	776	383,7	12	65
220-315 kW	650	520	1078,8	1046,8	430,2	13	130
355-450 kW	800	700	1320	1280	438	16	220
500-630 kW	1028	800	1500	1460	450	16	300

4 Installation of the frequency converter

4.1. Mechanical installation

Installation site requirements

Ambient temperature: the ambient temperature greatly affects the service life of the converter and should not exceed the permissible range.

The converter must be installed vertically on a non-combustible surface. Do not install horizontally or at an angle.

The converter must be installed in a vibration-free environment or in an environment with vibration not exceeding 0,6 G (5,9 m/s^2).

The converter should not be exposed to direct sunlight or humidity.

The converter must not be exposed to flammable, explosive or corrosive gases.

The converter should not be exposed to oil or salt mist/spray, dust or metallic particles.

Wiring diagram

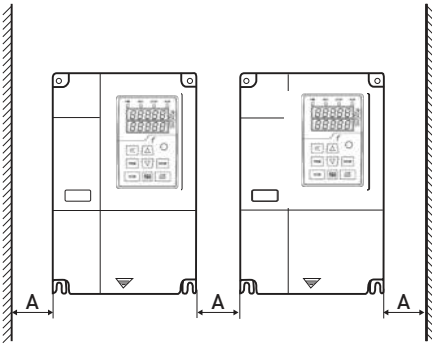

Fig. 4-1 Side-by-side installation of multiple converters

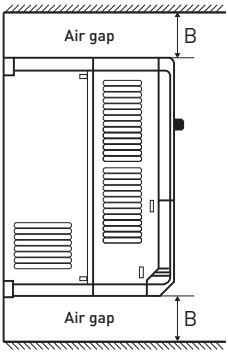

Fig. 4-2 Air circulation clearances

Vertical installation of multiple converters

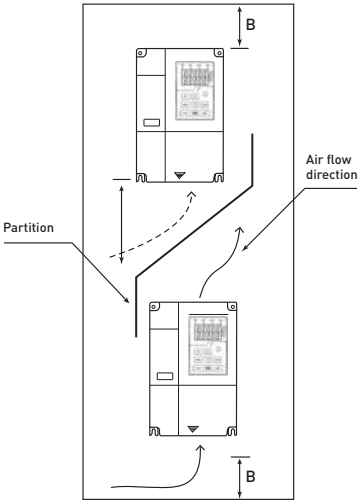

Fig. 4-3 Vertical installation of multiple converters

Single device installation: dimension A can be ignored for models less than 22 kW. For models more than 22 kW, dimension A must be larger than 50 mm.

For vertical installation, add a deflector, as shown on the figure above.

Table 4-1

Converter rating	Installation dimensions	
	A	B
0,4-15 kW	≥50	≥100
18,5-45 kW	≥50	≥200
≥55 kW	≥150	≥300

Heat dissipation considerations during installation

The converter must be installed vertically to allow heat to dissipate upwards. Do not install the converter upside down. If you need to install several converters in a single cabinet, best option is to install them side-by-side in a single row. If the converters are to be installed vertically, one above the other, please include a separating partition, as shown in Figure 4-3.

Heat generated during normal operation of the converter does not exceed 4% of its rated power.

When calculating cabinet heat, take into account the heat dissipation of other devices in the cabinet.

The mounting bracket must be fire resistant.

4.2 Electrical installation
Wiring diagram
Up to 7,5 kW

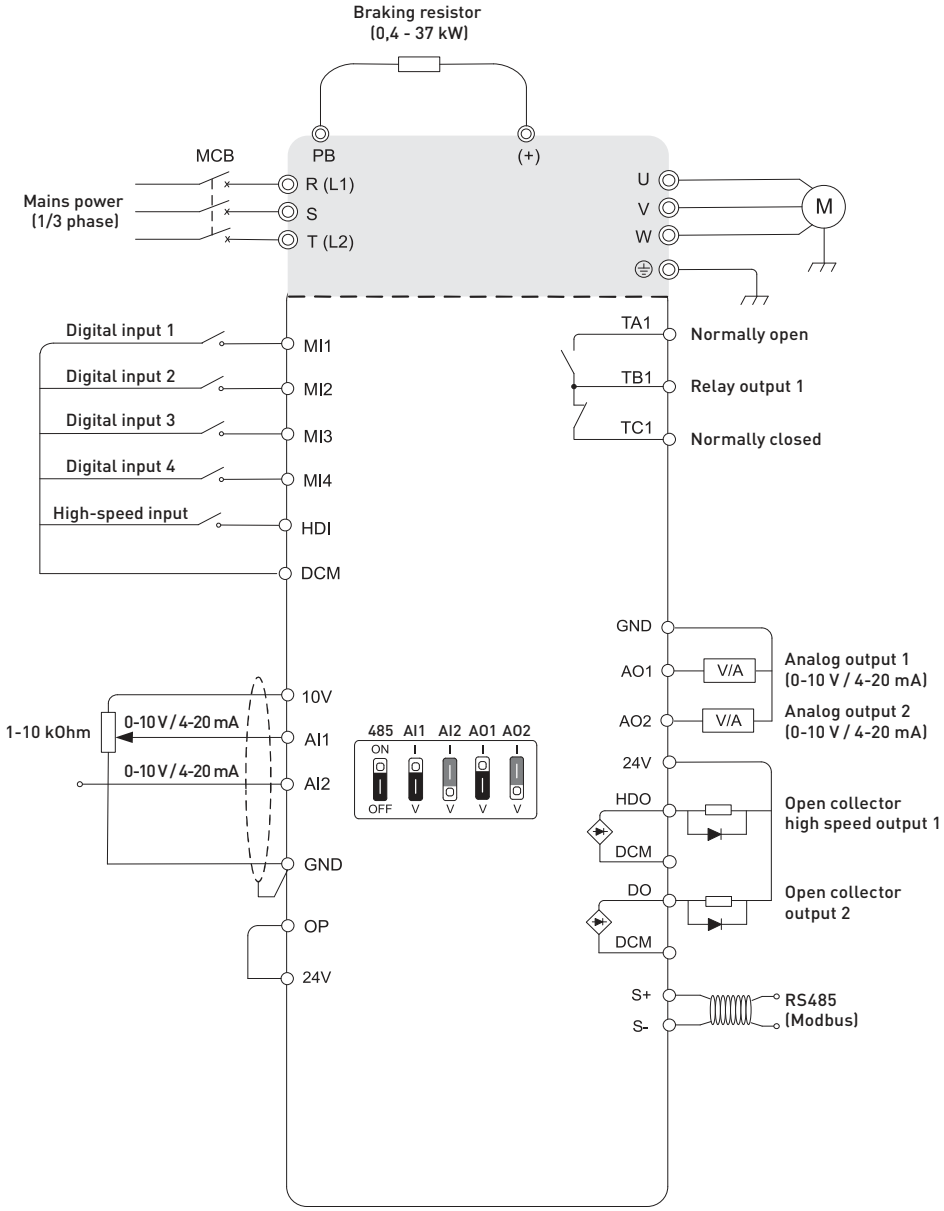

Over 11 kW

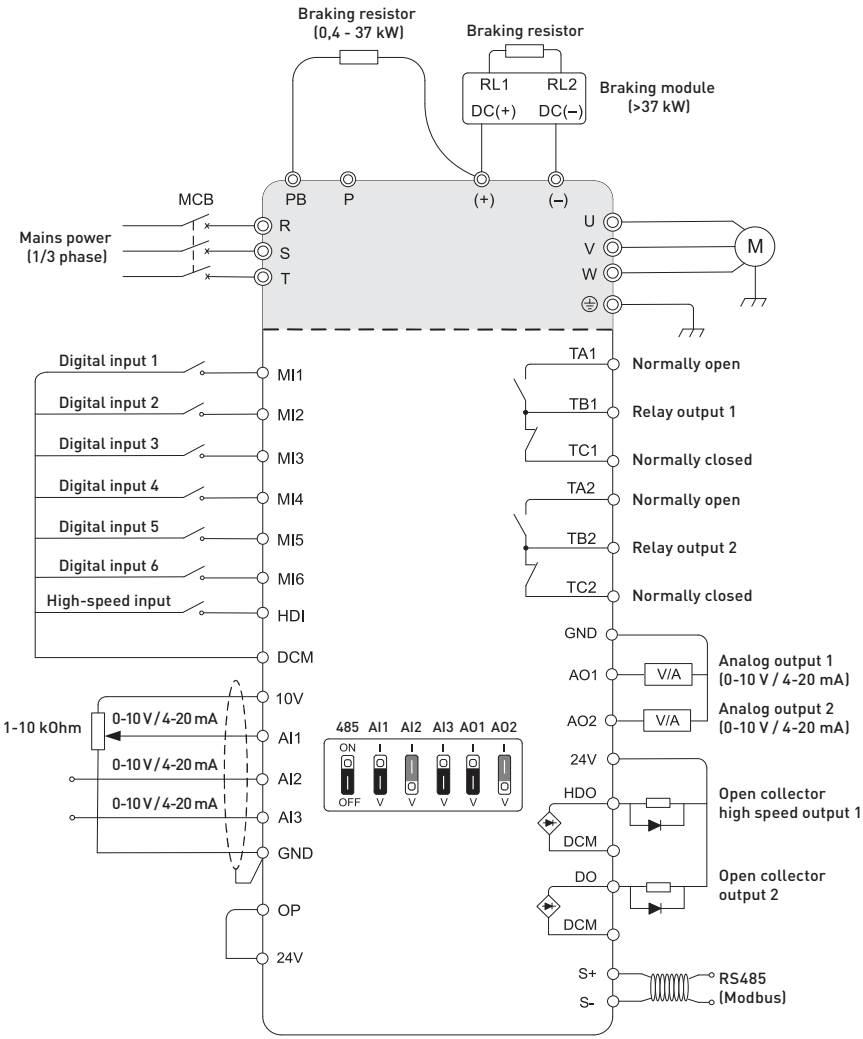

Notes:

1. Symbol ⊚ indicates power circuit terminal, symbol ◯ indicates control circuit terminal.
2. Converter modules below 18 kW have an integrated braking module, while models from 18,5 kW and above the braking module is a separate optional model. For converters above 110 kW the braking module is always an external device that is ordered separately.
3. Braking resistors for all models are always separate devices, ordered separately.

ATTENTION!

A braking resistor cannot be installed if a converter is not equipped with an integrated braking unit.

Power supply terminals

WARNING!

Make sure that the circuit breaker is in the off/open position befor performing any electrical work. Failure to do so may result in an electrical shock. Electrical installation work must be carried out by qualified and trained personnel. Failure to do so may result in damage to the equipment, injury, or death. Ensure proper grounding of the equipment, failure to do so may result in fire or electric shock.

ATTENTION!

- Make sure that the mains power parameters (phases, rating) is suitable for your model of the frequency converter. Failure to do so may result in damages to the converter.
- Make sure that the motor is designed to be suitable for use with a frequency converter, otherwise the motor may be damaged.
- Do not connect power supply to terminals U, V and W. Otherwise, the converter may be damaged.

ATTENTION!

- Do not connect the braking resistor directly to the DC circuit terminals (+) and (-). This may result in a fire.

Table 4-2

Terminal	Description
R(L1), T(L2)	Power supply connection terminals (1-phase)
R, S, T	Power supply connection terminals (3-phase)
(+), (-)	Terminals for external braking module (>18,5 kW)
(+), PB	Terminals for braking resistor, for models with integrated braking module (11-37 kW)
P1, (+)	External DC reactor terminals
U, V, W	Three-phase electric motor terminals
⏚	Ground terminal

ATTENTION!

When connecting to the main circuit:

1) Power input terminals are R, S and T.

   There is no phase sequence requirement.

2) Terminals (+) and (-) of the DC bus.

   Please note that there may be residual high voltage at the DC bus (+) and (-) terminals after power is turned off. Wait until the indicator on the operator panel goes off and make sure that the terminal voltage is below 36 V before connecting. Otherwise, it may result in electric shock.

   When selecting an external braking unit for a converter with a rated power of 18 kW or higher, make sure to never reverse the polarity when connecting the (+) and (-) terminals. Otherwise, it may cause damage to the converter or fire.

   The length of the wiring for connecting the braking module must not exceed 10 m.

   Do not connect the braking resistor directly to the DC bus terminals, otherwise it may result in damage to the converter or cause a fire.

3) Connection terminals for braking resistor: (+) and PB.

   Converters with a rated power of up to 15 kW have an integrated braking module, where the braking resistor must be connected to terminals (+) and PB. When selecting the type of braking resistor, the recommended value of resistance and dissipated energy is provided for reference only and should be recalculated depending on the intensity of braking and the amount of braking energy that needs to be dissipated as heat. The length of the braking resistor connection cable must not exceed 5 m. Otherwise, it may lead to the damaging of the converter.

4) External DC reactor connection terminals: P1 and (+).

   For converters rated 18kW and above with an external reactor, install a DC reactor between terminals P1 and (+) instead of a jumper during assembly.

5) Output terminals U, V, W of the converter.

   Do not connect a capacitor or a discharger to the output terminals of the converter: this may lead to tripping the protection or device malfunction. When using a long motor cable, distributed capacitance may cause electrical resonance, which may damage the motor insulation or cause current leakage. As a result, overcurrent protection will be tripped. If the motor cable length exceeds 100 m, an AC output reactor must be installed.

6) PE ground terminal ⏚.

   The terminal must be reliably grounded. Ground resistance should be below 0.1 Ω. Otherwise, it may cause incorrect operation or damage to the converter.

   Do not use neutral as a ground! Control Circuit Terminals and Connection

Control circuit terminals and connection

Inverter control circuit terminals for models greater than 18 kW:

TA1	TB1	TC1	TA2	TB2	TC2

S+	S–	AI1	AI2	AI3
GND	GND	AO1	AO2	10V

MI1	MI2	MI3	MI4	MI5	MI6	HDI
HDO	DO	24V	24V	OP	DCM	DCM

Control panel jumpers

Up to 7,5 kW

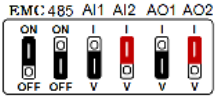

Over 11 kW

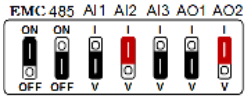

Table 4-3

Jumper	Connection	Description
AI1	Closed 1 & 2	AI2 input: 0 - 10 V
	Closed 2 & 3	AI2 input: 4 - 20 mA (default)
AI2	Closed 1 & 2	AI2 input: 0 - 10 V (default)
	Closed 2 & 3	AI2 input: 4 - 20 mA
AI3	Closed 1 & 2	AI2 input: 0 - 10 V
	Closed 2 & 3	AI2 input: 4 - 20 mA (default)
AO1	Closed 1 & 2	Output: 4 - 20 mA
	Closed 2 & 3	Output: 0 - 10 V (default)
AO2	Closed 1 & 2	Output: 4 - 20mA 10V (default)
	Closed 2 & 3	Output: 0 -
485	Closed 1 & 2	RS-485 terminal resistor connected
	Closed 2 & 3	RS-485 terminal resistor disconnected
EMC	Closed 1 & 2	Built-in EMC filter enabled (default)
	Closed 2 & 3	Built-in EMC filter disabled

Control circuit terminals

Table 4-4

Legend	Name	Description
Power supply		
+10 V~ GND	+10 V power supply	Provides external power supply of +10V, maximum output current - 100mA for operating external potentiometer, potentiometer resistance range: 1 kΩ - 10 kΩ.
+24 V~ DCM	+24 V power supply	Provides external power supply of +24V. Often used as power for digital input/output terminals and external sensors. Maximum output current: 150mA.
Analog input		
AI1~GND	Analog input terminal 1	1. Input reactance: 22 kΩ (voltage); 500 Ω (current) 2. Input range: DC 0V~10V/4mA~20mA, selected via AI jumpers on the control panel.
AI2-GND	Analog input terminal 2	
AI3-GND	Analog input terminal 3	
Digital input		
MI1	Digital input 1	1. Optocoupler isolation, compatible with both PNP and NPN 2. Input reactance: 4,7 kΩ (2,4 kΩ for >11 kW) 3. Input voltage range: 9 V - 30 V
MI2	Digital input 2	
MI3	Digital input 3	
MI4	Digital input 4	
MI5	Digital input 5	
MI6	Digital input 6	
HDI	High-speed input	High speed input can operate at a maximum signal frequency of 100 kHz
Analog output		
AO1~GND	Analog output 1	Output voltage range: 0 V - 10 V. Voltage/Current signal selected via the AO jumper on the control panel. Output voltage range: 0 V - 10 V. Output current range: 4 mA - 20 mA.
AO2-GND	Analog output 2	
Digital output		
HDO	High-speed open collector output	High speed output can operate at a maximum signal frequency of 100 kHz
DO	Open collector output	Corresponds to DCM common output terminals. Output voltage range: 0 V - 10 V. Output current range: 0 mA - 50 mA. Input reactance 24 V: 2 kΩ - 10kΩ
Relay output 1		
TB1-TC1	Normally closed terminal	Contact power: AC 250 V, 3 A, cosϕ = 0,4 DC 30 V, 1 A
TB1-TA1	Normally open terminal	
Relay output 2		
TB2-TC2	Normally closed terminal	Contact power: AC 250 V, 3 A, cosϕ = 0,4 DC 30 V, 1 A
TB2-TA2	Normally open terminal	
RS-485		
S+	RS485+	Modbus interface, shielded twisted pair recommended
S-	RS485-	
NPN - PNP switching		
OP	Digital inputs power terminal	Used for switching the power supply of digital inputs from internal external, as well as switchin between NPN and PNP modes.

Cable selection

Power cables

Cable size must be selected in accordance with the current and voltage parameters of the converter.

A circuit breaker is recommended between the mains power supply and terminals R, S and T.

Do not route power and signal cables within the same cable channel.

Do not connect the mains power supply to terminals U, V, and W.

To protect against short circuits, make sure that the cables connected to the output contacts are not touching any metal objects.

Route power cables at at a distance from other equipment to ensure electromagnetic compatibility. Install a choke (reactor) at the output of the frequency converter if the cable length between the motor and the frequency converter exceeds 50 m (for converters with a rated voltage of 230 V) or 100 m (for converters with a rated voltage of 380 V).

If the length of the cable between the motor and the converter exceeds 50 m, reduce the carrier frequency.

Control cables

Do not route power and signal cables within the same cable channel.

Use shielded cables with a cross-section of 0.5 - 2 mm^2.

The length of any analog control cable should not exceed 20 m.

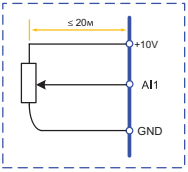

Grounding

Grounding resistance should not exceed 100 Ω.

Use the shortest possible cable run for ground connection.

The ground line of the converter must not be connected to the ground lines of other devices.

The converter must be grounded according to the following diagrams:

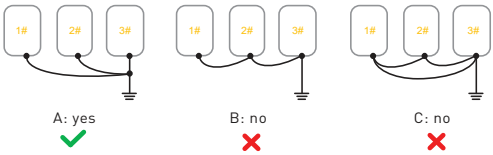

NPN and PNP connection

Frequency converters are compatible with NPN and PNP connection layouts (4 connection variants):

Built-in 24V power supply

a) NPN connection

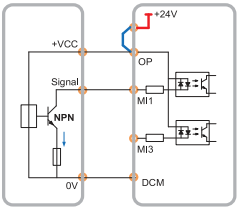

b) PNP connection

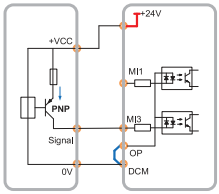

External power supply 24V

c) NPN connection

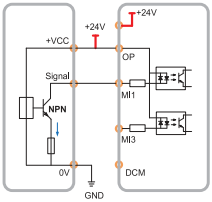

d) PNP connection

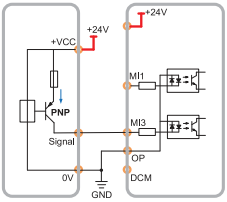

4.3. EMC compliance

To comply with EMC (electromagnetic compatibility) requirements, the following rules must be observed during installation: Use only shielded cables for motor and control cables.

- Connect the shielding to ground at both ends.
- Connect the shielding using cable clamps only. Do not use a twist splice!
- Use ribbed washers to maintain good electrical contact.
- Do not use unshielded power cables.

5 Frequency converter operation

5.1 Control panel

Double-line control panel

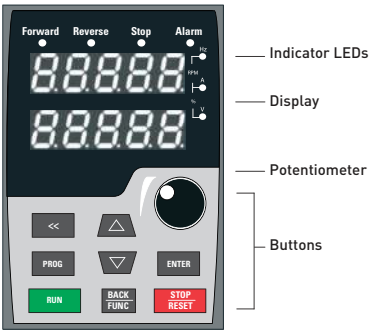

Table 5-1 Control panel Indicators

Indicator	Function
Forward	Forward rotation of the electric motor
Reverse	Reverse rotation of the electric motor
Stop	Motor stopped
Alarm	Error

Indicators

The digital displays are a 5-digit lines that displays control data including frequency setting, output frequency, etc., as well as error codes.

For converter models with double-line control panels the higher of the two lines displays the same parameters as the single-line control panel. The lower display parameters configured under F7-08 (by default value 04 - operating current). It can be configured to display other parameters.

Table 5-2 Control panel buttons

Button	Name	Function
PROG	Programming button	Enter/exit the first level menu
ENTER	Enter button	Enter subsequent menu levels. Confirm settings
△	Up/Increase button	Increase the value, go to next function code
▽	Down/ Decrease button	Decrease value, go to previous function code
<<	Shift button	In stop/run mode, cyclically display operating parameters; in configuration mode, press to select a digit to change.
RUN	RUN button	Start the converter within controls from the control panel
BACK FUNC	BACK/FUNC button	In error mode, press button to reset the converter status. Programmable under F7-02 code.
STOP	STOP button	When the converter is running, press to stop it.

5.2 Function codes and configuration

The control panel menu of the VECTOR-100 frequency converter has a three-tier menu:

First tier - Settings group;

Second tier - Individual settings;

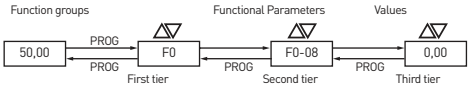

Third tier - Setting value.

Fig. 5-1 Configuring the setting value

Note

When you are on the third menu level, you can either press "PROG" or "ENTER" button to return to the second menu level. The difference between the functions of "PROG" and "ENTER" buttons: pressing "ENTER" will return you to the second menu level, saving any changes made to the setting, pressing "PROG" will return you to the second menu level without saving any changes made to the setting.

Example:

Changing setting F1-03 from 00,00 Hz to 05,00 Hz. If a setting can be changed, its value will be blinking.

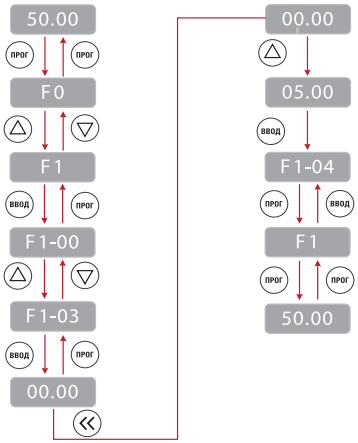

Note

If a setting value is not blinking, it is read only and cannot be changed. Possible reasons:

- The setting cannot be changed as it is not a configurable value, but rather an indicator of a controller state.
- The setting cannot be changed while the frequency converter is running. It can be changed after the converter has been stopped.

5.3. Initial start up

When the inverter is turned on, the system is initialized and the display shows 88888. After initialization is completed, the converter will go into standby mode or into an error mode and display an error code.

5.4 Error mode

In an error mode, the converter will display an error code and associated (e.g., current, voltage, etc.). Eliminate the cause of error (might require reconfiguring FA "Errors and Protection" group settings). To clear the error, press the "STOP/RESET" button or use external terminals.

5.5 Standby mode

In a stop or standby mode the converter display will show the converter status and configured settings. Displayed settings are controlled by the configurable F7-05 function (stop status display).

Press the « button to switch between displayed values.

By default, after a power outage, the converter will display settings and status values prior to the outage.

5.6 Running mode

In running mode, the display can be configured to show 32 parameters. This is configured by modifying F7-03 and F7-04 functions (Display - 1; Do not display - 0).

Press the « button to switch between displayed values.

5.7 Password protection

The converter can be protected by a user password. Set parameter F7-00 to a non-zero value, which will bethe user password. Password protection becomes active immediately after exiting the programming mode. When you press the "PROG" button to enter programming mode, the display will show "------". The user must enter the correct password to enter the menu.

To disable the password protection function, enter the programming mode and set the value of F7-00 to "0".

6 Programmable settings

6.1 Primary functional settings

Primary functional settings are listed in the table below.

The "Code" contains the function code of a setting.

The "Default" column contains the default setting value.

The "CS" (configurable setting) indicates whether the setting value can be configured:

○ – setting can be changed while the converter is stopped or running.

◎ – setting cannot be changed while the converter is running.

● – setting is a status or measured value measured and cannot be changed.

Code	Name	Potential values	Default	CS
Group F0: Basic Settings				
F0-00	Converter model	1: Model G (regular constant torque) 2: Model P (for pump and fan applications)	1	●
F0-01	Control Mode	0: Sensorless vector control 1: Reserved 2: Voltage-frequency control (U/f)	2	◎
F0-02	Control source	0: Control panel 1: Terminals 2: Serial port (Modbus)	0	◎
F0-03	Primary frequency source - A	0: Control panel (F0-08, momentary "▲" and "▼" adjustable, without saving to device configuration) 1: Control panel potentiometer 2: AI1 3: AI2 4: AI3 5: High Speed HDI Input 6: Multi-step speed profile 7: Serial PLC 8: PID controller 9: RS-485	1	◎
F0-04	Secondary frequency source - B	Same as for F0-03	0	◎
F0-05	Secondary frequency source B reference	0: Max. frequency 1: Primary frequency source A	0	○
F0-06	Secondary frequency source B range	0%-150%	100%	○

Code	Name	Potential values	Default	CS
F0-07	Frequency source selection	Unit digit (0X): frequency source selection 0: Primary frequency source A 1: Calculated result between A and B (as determined by tens digit (X0) 2: Switching between A and B 3: Switching between A and calculated result 4: Switching between B and calculated result Tens digit (X0): A and B calculation method 0: A + B 1: A - B 2: Max. (A, B) 3: Min. (A, B)	00	○
F0-08	Reference control panel frequency	0,00 Hz - max frequency: (F0-10)	50,00 Hz	○
F0-09	Motor rotation	0: Forward 1: Reverse	0	○
F0-10	Max. frequency	50,0 Hz - 600,0Hz (if F0-22=1); 50,0 Hz - 60,00 Hz (if F0-22=2)	50,00 Hz	◎
F0-11	Upper frequency limit source	0: F0-12 1: AI1 (0-10V / 4-20 mA) 2: AI2 (0-10V / 4-20 mA) 3: AI3 (0-10V / 4-20 mA) 4: High-speed input 5: RS-485	0	◎
F0-12	Upper frequency limit	F0-14 (lower frequency limit) - F0-10 (max. frequency)	50,00 Hz	○
F0-13	Upper frequency limit offset	0,00 Hz - F0-10 (max. frequency)	0,00 Hz	○
F0-14	Lower frequency limit	0,00 Hz - F0-12 (upper frequency limit)	0,00 Hz	○
F0-15	Carrier frequency	0,5 kHz - 16,0 kHz	Depends on the model	○
F0-16	Temperature-dependent carrier frequency adjustment	0: No 1: Yes	0	○
F0-17	Acceleration time 1	0,00 s - 65 000 s	Depends on the model	○
F0-18	Deceleration time 1	0,00 s - 65 000 s	Depends on the model	○
F0-19	Acceleration/ Deceleration time units	0: 1s 1: 0,1 s 2: 0,01 s	1	◎
F0-20	Reserved			●

Code	Name	Potential values	Default	CS
F0-21	Secondary frequency source offset when combined	0,00 Hz - F0-10 (max. frequency)	0,00 Hz	○
F0-22	Control frequency resolution	1: 0,1 Hz 2: 0,01 Hz	2	◎
F0-23	Frequency memory mode	0: Disabled 1: Enabled	0	○
F0-24	Acceleration/ deceleration time frequency	0: F0-10 (max. frequency) 1: Set frequency 2: 100 Hz	0	◎
F0-25	Running frequency UP/ DOWN control reference	0: Running frequency 1: Setting frequency	0	◎
F0-26	Control and frequency source combination	Units digit (0X): combination of control panel commands and a frequency source at F0-02=0 0: No combination 1: Frequency set using control panel 2: AI1 3: AI2 4: AI3 5: High Speed HDI Input 6: Multi-step speed profile 7: Serial PLC 8: PID controller 9: RS-485 Tens digit: combination of terminals as control source and frequency source at F0-02=1; setting values same as for units digit Hundreds digit: combination of comm channel as control source and frequency source at F0-02=1; setting values same as for units digit	000	○
F0-27	Reset settings	0: No action specified 1: Reset groups F0 and F1 to default settings 2: Reset error history 3: Reset device to factory settings	0	○

Code	Name	Potential values	Default	CS
Group F1: Start and stop control				
F1-00	Start mode	0: Direct starting 1: RPM detection restarting 2: Pre-excitation starting	0	○
F1-01	RPM detection	0: Search from stop frequency 1: Search from zero 2: Search from maximum frequency	0	◎
F1-02	RPM detection resolution	1 - 100	20	○
F1-03	Starting frequency	0,00 Hz - 10,00 Hz	0,00 Hz	○
F1-04	Starting frequency hold time	0,0 s - 100,0 s	0,0 s	◎
F1-05	DC braking before starting. Pre-excitation current	0% - 100%	0%	◎
F1-06	DC braking time before starting. Pre-excitation time	0,0 s - 100,0 s	0,0 s	◎
F1-07	Acceleration/ Deceleration mode	0: Linear acceleration/ deceleration 1: S-shaped acceleration/ deceleration curve, type A 2: S-shaped acceleration/ deceleration curve, type B	0	◎
F1-08	Initial S-curve time	0,0% - (100,0% minus F1-09)	30,0%	◎
F1-09	Final S-curve time	0,0% - (100.0% minus F1-08)	30,0%	○
F1-10	Stop mode	0: Braking 1: Coasting stop	0	○
F1-11	DC braking start frequency after stop	0,00 Hz - F0-10 (max. frequency)	0,00 Hz	○
F1-12	DC braking delay after stop	0,0 s - 100,0 s	0,0 s	○
F1-13	DC braking current after stop	0% - 100%	0%	○
F1-14	DC braking time after stop	0,0 s - 100,0 s	0,0 s	○
F1-15	Braking ratio	0% - 100%	100%	○

Code	Name	Potential values	Default	CS
Group F2: Electric motor settings				
F2-00	Motor type	0: Conventional asynchronous motor 1: Frequency controlled asynchronous motor	0	◎
F2-01	Motor rated power	0,1 kW - 1000,0 kW	Depends on model	◎
F2-02	Motor rated voltage	1 V - 2000 V	Depends on model	◎
F2-03	Motor rated current	0,01 A - 655,35 A (converters up to 55 kW) 0,1 A - 6553,5 A (converters over 55 kW)	Depends on model	◎
F2-04	Motor rated frequency	0,00 Hz - F0-10 (max. frequency)	Depends on model	◎
F2-05	Rated motor speed	1 rpm - 65535 rpm	Depends on model	◎
F2-06	Motor stator resistance	0,001 Ω - 65,535 Ω (converters up to 55 kW) 0,0001 Ω - 6,5535 Ω (converters over 55 kW)	Depends on motor parameters	◎
F2-07	Motor rotor resistance	0,001 Ω - 65,535 Ω (converters up to 55 kW) 0,0001 Ω - 6,5535 Ω (converters over 55 kW)	Depends on motor parameters	◎
F2-08	Motor windings inductance	0,01 mH - 655,35 mH (converters up to 55 kW) 0,001 mH - 65,535 mH (converters over 55 kW)	Depends on motor parameters	◎
F2-09	Mutual rotor/ stator inductance	0,01 mH - 655,35 mH (converters up to 55 kW) 0,001 mH - 65,535 mH (converters over 55 kW)	Depends on motor parameters	◎
F2-10	Zero-load current	0,01 A - F2-03 (rated current) (converters up to 55 kW) 0,1A - F2-03 (rated current) (converters over 55 kW)	Depends on motor parameters	◎
F2-11	Autoconfig	0: No autoconfig 1: Static autoconfig 2: Dynamic autoconfig	0	◎

Code	Name	Values	Default	CS
Group F3: Vector control settings				
F3-00	Speed loop proportional gain 1	1 - 100	30	○
F3-01	Speed loop integration time 1	0,01 s - 10,00 s	0,05 s	○
F3-02	Low switching frequency	0,00 - F3-05	5,00 Hz	○
F3-03	Speed loop proportional gain 2	1 - 100	20	○
F3-04	Speed loop integration time 2	0,01 s - 10,00 s	1,00 s	○
F3-05	High switching frequency	F3-02 - F0-10 (max. frequency)	10,00 Hz	○
F3-06	Slip compensation	50% - 200%	100%	○
F3-07	Speed loop filter time	0,000 s - 0,100 s	0.000 s	○
F3-08	Over-excitation correction	0 - 200	64	○
F3-09	Torque upper limit source for speed c ontrol mode	0: F3-10 1: AI1 2: AI2 3: AI3 4: High Speed HDI Input 5: RS-485 6: Min. (AI1, AI2) 7: Max. (AI1, AI2) F3-10 corresponds to the full scale of 1-7	0	○
F3-10	Torque upper limit setting	0,0% - 200,0%	170,0%	○
F3-11-F3-12	Reserved			
F3-13	Excitation control proportional gain	0 - 60 000	2000	○
F3-14	Excitation control integral gain	0 - 60 000	1300	○
F3-15	Torque control proportional gain	0 - 60 000	2000	○
F3-16	Torque control integral gain	0 - 60 000	1300	○
F3-17	Speed Loop Integration	Integral separation 0: not used 1: used	0	○

Code	Name	Values	Default	CS
Group F4: V/f control settings				
F4-00	U/f curve settings	0: Linear U/f curve 1: Custom U/f curve 2: Quadratic U/f curve 3: 1,2th power 4: 1,4th power 6: 1,6th power 8: 1,8th power 9: Reserved 10: Total U/f separation 11: Partial U/f separation	0	◎
F4-01	Torque boost	0.0: Automatic 0,1% - 30,0%	Depends on the model	○
F4-02	Torque boost cutoff frequency	0,00 Hz - F0-10 (max frequency)	50,00 Hz	◎
F4-03	U/f curve frequency point 1	0,00 Hz - F4-05	10,00 Hz	◎
F4-04	U/f curve voltage point 1	0,0% - 100,0% ATTENTION! 100% is the rated motor voltage.	25,0%	◎
F4-05	U/f curve frequency point 2	F4-03 - F4-07	20,00 Hz	◎
F4-06	U/f curve voltage point 2	0,0% - 100.0%	50,0%	◎
F4-07	U/f curve frequency point 3	F4-05 - F2-04 (rated motor power)	45,00 Hz	◎
F4-08	U/f curve voltage point 3	0,0% - 100.0%	75,0%	◎
F4-09	Slip compensation	0,0% - 200,0%	0,0%	○
F4-10	Over-excitation correction	0 - 200	64	○
F4-11	U/f oscillation suppression gain	0 - 100	Depends on the model	○
F4-12	Reserved			○
F4-13	U/f separation voltage source	0: digital setting (F4-14) 1: AI1 2: AI2 3: AI3 4: High Speed HDI Input 5: Multi-step speed profile 6: Serial PLC 7: PID 8: Communication (Modbus)	0	○
F4-14	Digital U/f separation setting	0 V - F2-02 (motor rated voltage)	0 V	○
F4-15	U/f separation voltage change time	0,0 s - 1000,0 s ATTENTION! controls voltage rise time from 0 V to the motor rated voltage.	0,0 s	○

Code	Name	Values	Default	CS
Group F5**: Input terminals**				
F5-00	MI1 terminal function	0: No function 1: Forward rotation 2: Reverse rotation 3: Three-wire control 4: Forward jog 5: Reverse jog 6: Frequency "UP" 7: Frequency "DOWN" 8: Coasting stop 9: Clear error 10: Converter pause 11: External error signal - NO 12: Multi-step signal 1 13: Multi-step signal 2 14: Multi-step signal 3 15: Multi-step signal 4 16: Acceleration/Deceleration time 1 17: Acceleration/Deceleration time 2 18: Primary frequency source switch 19: Reset "UP" and "DOWN" settings (terminal and control panel) 20: Switch start control source 21: Acceleration/deceleration lock 22: PID control pause 23: PLC reset 24: Wobble frequency pause 25: Counter input 26: Counter reset 27: Length count input 28: Length count reset 29: Torque control lock 30, 31: Reserved 32: DC braking 33: External error signal - NC 34: Frequency modification enabled 35: PID control reverse 36: External stop 1 37: Control source selection 2 38: Disable PID Integration 39: Switch frequency source A to preset frequency 40: Switch frequency source B to preset frequency 41, 42: Reserved 43: PID controller profile switching 44, 45: Reserved 46: speed control / torque control switching 47: Emergency stop 48: External stop 2 49: Deceleration prior to DC braking 50: Reset operating time	1	◎
F5-01	MI2 terminal function		2	◎
F5-02	MI3 terminal function		0	◎
F5-03	MI4 terminal function		0	◎
F5-04	MI5 terminal function			
F5-05	MI6 terminal function			
F5-06	HDI terminal function		0	◎
F5-07-F5-09	Reserved			●
F5-10	Digital input filter time	0,000 s - 1,000 s	0,010 s	○
F5-11	Control Mode	0: Two-wire control 1 1: Two-wire control 2 2: Three-wire control 1 3: Three-wire control 2	0	◎

Code	Name	Values	Default	CS
F5-12	"UP"/"DOWN" frequency change rate	0.001 Hz/s - 65,535 Hz/s	1,00 Hz/s	○
F5-13	AI1 minimum voltage	0,00 V - F5-15	0,00 V	○
F5-14	AI1 minimum voltage correspondence	-100,0% ... +100,0%	0,0%	○
F5-15	AI1 maximum voltage	F5-13 ... +10,00 V	10,00 V	○
F5-16	AI1 maximum voltage correspondence	-100,0% ... +100,0%	100,0%	○
F5-17	AI1 filter time	0,00 s - 10,00 s	0,10 s	○
F5-18	AI2 minimum voltage	0,00 V - F5-20	0,00 V	○
F5-19	AI2 minimum voltage correspondence	-100,0% ... +100,0%	0,0%	○
F5-20	AI2 maximum voltage	F5-18 ... +10,00 V	10,00 V	○
F5-21	AI2 maximum voltage correspondence	-100,0% ... +100,0%	100,0%	○
F5-22	AI2 filter time	0,00 s - 10,00 s	0,10 s	○
F5-23	AI3 minimum voltage	0,00 V - F5-25	0,00 V	◎
F5-24	AI3 minimum voltage correspondence	-100,0% ... +100,0%	0,0%	◎
F5-25	AI3 maximum voltage	F5-23 ... +10,00 V	10,00 V	◎
F5-26	AI3 maximum voltage correspondence	-100,0% ... +100,0%	100,0%	◎
F5-27	AI3 filter time	0,00 s - 10,00 s	0,10 s	◎
F5-28 - F5-49	Reserved			
F5-50	HDI minimum frequency	0,00 kHz - F5-52	0,00 kHz	○
F5-51	HDI minimum frequency correspondence	-100,0% ... +100,0%	0,0%	○
F5-52	HDI maximum frequency	F5-50 - 100,00 kHz	50,00 kHz	○
F5-53	HDI maximum frequency correspondence	-100,0% ... +100,0%	100,0%	○
F5-54	HDI filter time	0,00 - 10,00 s	0,10 s	○
F5-55 - F5-56	Reserved			
F5-57	MI1 delay time	0,0 s - 3600,0 s	0,0 s	◎

Code	Name	Values	Default	CS
F5-58	MI2 delay time	0,0 s - 3600,0 s	0,0 s	◎
F5-59	MI3 delay time	0,0 s - 3600,0 s	0,0 s	◎
F5-60	MI digital input logic - section 1	0: Direct logic 1: Reverse logic Units digit: MI1 Tens digit: MI2 Hundreds digit: MI3 Thousands digit: MI4 Tens of thousands digit: MI5	00000	◎
F5-61	MI digital input logic - section 2	0: Direct logic 1: Reverse logic Units digit: MI6 Tens digit: HDI	00	◎

Code	Name	Values	Default	CS
Group F6: Output terminals				
F6-00	HDO output function	0: High speed output 1: Open collector output	1	○
F6-01	HDO output function (in open collector output mode)	0: No function 1: Converter running 2: Converter error 3: Frequency setpoint FDT1 reached 4: Frequency amplitude reached 5: Zero frequency operation 6: Motor overload warning 7: Converter overload warning 8: Maximum counter setpoint reached 9: Counter setpoint reached 10: Length setpoint reached 11: PLC cycle completed 12: Total operating time reached 13: Frequency limit reached 14: Torque limit reached 15: Converter ready 16: AI1> AI2 17: Upper frequency limit reached 18: Lower frequency limit reached (No output signal after stopping) 19: Undervoltage warning 20: Establishing communication 21: Position set 22: Reserved 23: Zero-frequency operation 2 24: Total time online reached 25: Frequency setpoint FDT2 reached	0	○
F6-02	Output relay function (TA1, TB1, TC1)		2	○
F6-03	Reserved			

Code	Name	Values	Default	CS
F6-04	DO2 Open collector output function	26: Frequency setpoint 1 reached 27: Frequency setpoint 2 reached 28: Output current setpoint 1 reached 29: Output current setpoint 2 reached 30: Time setpoint reached 31: Voltage limit at input AI1 exceeded 32: Sync time setpoint reached 33: Reverse rotation 34: Zero current 35: IGBT module temperature setpoint reached 36: Output current limit exceeded 37: Lower frequency limit reached (continues to output after stopping) 38: Warning (converter continues to run) 39: Motor overheat warning 40: Time setpoint 1 reached	0	○
F6-05	Output relay function (TA2, TB2, TC2)		0	○
F6-06	Reserved	0: Running frequency 1: Frequency setpoint 2: Output current 3: Output torque 4: Output power 5: Output voltage 6: Reserved 7: AI1 8: AI2 9: AI3 10: Length 11: Current counter value 12: Communication 13: Motor rotation speed 14: Output current (100.0% corresponds to 1000,0 A) 15: Output voltage (100,0% corresponds to 1000,0 V) 16: Reserved		
F6-07	AO output function		0	○
F6-08	AO2 output function		1	○
F6-09	HDO output upper limit	0,01 - 100 kHz	50 kHz	○
F6-10	AO1 offset ratio	-100,0% ... +100,0%	0,0%	○
F6-11	AO1 gain	-10,00 ... +10,00	1,00	○
F6-12	AO2 offset ratio	-100,0% ... +100,0%	0,0%	○
F6-13	AO2 Gain	-10,00 ... +10,00	1,00	○
F6-14 - F6-16	Reserved			
F6-17	HDO output delay time	0,0 s - 3600,0 s	0,0 s	○
F6-18	Relay 1 output delay time	0,0 s - 3600,0 s	0,0 s	○
F6-19	Reserved			
F6-20	DO output delay time	0,0 s - 3600,0 s	0,0 s	○
F6-21	Relay 2 output delay time	0,0 s - 3600,0 s	0,0 s	○

Code	Name	Values	Default	CS
F6-22	DO output terminals logic	0: Direct logic 1: Reverse logic Units digit: HDO Tens digit: relay 1 Hundreds digit: reserved Thousands digit: DO Tens of thousands digit: relay 2	00000	○

Code	Name	Values	Default	CS
Group F7: Display and control panel				
F7-00	User password	0 ~ 65535	0	○
F7-01	Function of the BACK/ FUNC button	0: Reverse rotation 1: Control source selection: control panel / remote 2: Switching between forward and reverse rotation 3: Jog forward 4: Jog reverse	0	◎
F7-02	Function of the STOP/ RESET button	0: Used only when controlled via control panel 1: Always used	1	○
F7-03	Control panel running status display - Block 1	0000 - FFFF Bit 00: Running frequency 1 (Hz) Bit 01: Frequency setpoint (Hz) Bit 02: Bus voltage (V) Bit 03: Output voltage (V) Bit 04: Output current (A) Bit 05: Output power (kW) Bit 06: Output torque (%) Bit 07: MI digital input mode Bit 08: DO mode Bit 09: AI1 voltage (V) Bit 10: AI2 voltage (V) Bit 11: AI3 Voltage (V) Bit 12: Counter value Bit 13: Length value Bit 14: Motor speed Bit 15: PID controller setting	401F	○
F7-04	Control panel running status display - Block 2	0000 - FFFF Bit 00: PID controller feedback Bit 01: PLC program step Bit 02: HDI input pulse frequency (kHz) Bit 03: Running frequency 2 (Hz) Bit 04: Remaining runtime Bit 05: AI1 voltage before calibration (V) Bit 06: AI2 voltage before calibration (V) Bit 07: AI3 voltage before calibration (V) Bit 08: Linear speed Bit 09: Total runtime (hours) Bit 10: Current runtime (min) Bit 11: Reserved Bit 12: Communication setpoint Bit 13: Reserved Bit 14: Primary frequency A (Hz) Bit 15: Secondary frequency B (Hz)	0000	○

Code	Name	Values	Default	CS
F7-05	Status display in standby mode	0000 - FFFF Bit 00: Frequency setpoint (Hz) Bit 01: Bus voltage (V) Bit 02: MI operating mode Bit 03: DO operating mode Bit 04: AI1 voltage (V) Bit 05: AI2 voltage (V) Bit 06: AI3 voltage (V) Bit 07: Counter value Bit 08: Length value Bit 09: PLC program step Bit 10: Load speed Bit 11: PID control Bit 12: HDI input frequency (kHz)	3	○
F7-06	Frequency/ Load speed display coefficient	0,0001 - 6,5000	3,0000	○
F7-07	IGBT module temperature	0,0 °C - 100,0 °C	-	●
F7-08	Secondary (lower) display status info	00: Running frequency 1 (Hz) 01: Frequency setpoint (Hz) 02: Bus voltage (V) 03: Output voltage (V) 04: Output current (A) 05: Output power (kW) 06: Output torque (%) 07: MI digital input mode 08: DO operating mode 09: AI1 voltage (V) 10: AI2 voltage (V) 11: AI3 voltage (V) 12: HDI input frequency (kHz) 13: Heatsink temperature 14: Counter value 15: Length value 16: Load speed frequency display 17: PID controller setting18: PID controller feedback 19: PLC program step 20: Frequency set by MODBUS 21: Primary frequency A (Hz) 22: Secondary frequency B (Hz) 23: Total runtime (hours) 24: Current runtime (min) 25: Total runtime 26: Remaining runtime	04	○
F7-09	Total runtime	0h - 65535h	-	●
F7-10	Serial number	-	-	●
F7-11	Software versions	-	-	●
F7-12	Load speed display decimal place	0: 0 decimal places 1: 1 decimal place 2: 2 decimal places 3: 3 decimal places	1	○
F7-13	Total time online	0h - 65535h		●
F7-14	Total power consumed	0 kW - 65535 kW		●
F7-15	Editing	0: Allowed 1: Not allowed	0	○

Code	Name	Values	Default	CS
Group F8: Additional functions				
F8-00	Jog frequency	0,00 Hz - F0-10 (max. frequency)	2,00 Hz	○
F8-01	Jog acceleration time	0,0s - 6500,0s	20,0 s	○
F8-02	Jog deceleration time	0,0s - 6500,0s	20,0 s	○
F8-03	Acceleration time 2	0,0s - 6500,0s	Depends on the model	○
F8-04	Deceleration time 2	0,0s - 6500,0s	Depends on the model	○
F8-05	Acceleration time 3	0,0s - 6500,0s	Depends on the model	○
F8-06	Deceleration time 3	0,0 s - 6500,0 s	Depends on the model	○
F8-07	Acceleration time 4	0,0 s - 6500,0 s	Depends on the model	○
F8-08	Deceleration time 4	0,0 s - 6500,0 s	Depends on the model	○
F8-09	Jump frequency 1	0,00 Hz - F0-10 (max. frequency)	0,00 Hz	○
F8-10	Jump frequency 2	0,00 Hz - F0-10 (max. frequency)	0,00 Hz	○
F8-11	Jump frequency amplitude	0,00 Hz - F0-10 (max. frequency)	0,01 Hz	○
F8-12	Zero-current FWD/ REV pause	0,0 s - 3000,0 s	0,0 s	○
F8-13	Reverse	0: Allowed 1: Not allowed	0	○
F8-14	Frequency under minimum action	0: Run at lower frequency limit 1: Stop 2: Run at zero frequency	0	○
F8-15	Droop control	0,00 Hz - 10,00 Hz	0,00 Hz	○
F8-16	Total time online reached setpoint	0h - 65000h	0 h	○
F8-17	Total runtime reached setpoint	0h - 65000h	0 h	○
F8-18	Auto-restart after power failure	0: Auto-restart 1: No auto-restart	1	○
F8-19	Frequency setpoint (FDT1)	0,00 Hz - F0-10 (max. frequency)	50,00 Hz	○
F8-20	Frequency lag setpoint (FDT1)	0,0% - 100,0% (of FDT1)	5,0%	○
F8-21	Frequency setpoint amplitude (FDT1)	0,0% - 100,0% (max frequency)	0,0%	○
F8-22	Jump frequency during acceleration/ deceleration	0: No 1: Yes	1	○

Code	Name	Values	Default	CS
F8-23 - F8-24	Reserved			
F8-25	Acceleration frequency switching setpoint	0,00 Hz - F0-10 (max. frequency)	0,00 Hz	○
F8-26	Deceleration frequency switching setpoint	0,00 Hz - F0-10 (max. frequency)	0,00 Hz	○
F8-27	Jog mode digital inputs priority	0: No 1: Yes	0	○
F8-28	Frequency setpoint (FDT2)	0,00 Hz - F0-10 (max. frequency)	50,00 Hz	○
F8-29	Frequency lag setpoint (FDT2)	0,0% - 100,0% (of FDT2)	5,0%	○
F8-30	Frequency setpoint 1	0,00 Hz - F0-10 (max. frequency)	50,00 Hz	○
F8-31	Frequency setpoint 1 amplitude	0,0% - 100,0% (max frequency)	0,0%	○
F8-32	Frequency setpoint 2	0,00 Hz - F0-10 (max. frequency)	50,00 Hz	○
F8-33	Frequency setpoint 2 amplitude	0,0% - 100,0% (max frequency)	0,0%	○
F8-34	Zero-current detection level	0,0% - 300,0% 100.0% corresponds to rated motor current	5,0%	○
F8-35	Zero current detection delay	0,01 s - 600,00 s	0,10 s	○
F8-36	Output overcurrent setpoint	0,0% (no detection) 0,1% - 300,0% (motor rated current)	180,0%	○
F8-37	Output overcurrent delay	0,00 s - 600,00 s	0,00 s	○
F8-38	Current setpoint 1	0,0% - 300,0% (motor rated current)	100,0%	○
F8-39	Current setpoint 1 amplitude	0,0% - 300,0% (motor rated current)	0,0%	○
F8-40	Current setpoint 2	0,0% - 300,0% (motor rated current)	100,0%	○
F8-41	Current setpoint 2 amplitude	0,0% - 300,0% (motor rated current)	0,0%	○
F8-42	Timer function	0: No 1: Yes	0	○
F8-43	Timer source	0: F8-44 1: AI1 2: AI2 3: AI3 Analog input range corresponds to F8-44	0	○
F8-44	Timer setpoint	0,0 min - 6500,0 min	0,0 min	○
F8-45	AI1 lower signal limit	0,00 V - F8-46	3,10 V	○

Code	Name	Values	Default	CS
F8-46	AI1 upper signal limit	F8-45 - 10,00 V	6,80 V	○
F8-47	IGBT module temperature warning	0°C - 100°C	75 °C	○
F8-48	Cooling fan control	0. Fan autostart when the converter is turned on 1. Fan autostart when the motor is turned on	0	○
F8-49	Wake up frequency	F8-51 (Standby frequency) - F0-10 (max. frequency)	0,00 Hz	○
F8-50	Wake up frequency delay	0,0 s - 6500,0 s	0,0 s	○
F8-51	Standby frequency	0,00 Hz - F8-49 (wake up frequency)	0,00 Hz	○
F8-52	Standby frequency delay	0,0 s - 6500,0 s	0,0 s	○
F8-53	Motor runtime setpoint	0,0 min - 6500,0 min	0,0 min	○

Code	Name	Values	Default	CS
Group F9: PID control				
F9-00	PID control source	0: F9-01 setpoint 1: AI1 2: AI2 3: AI3 4: HDI 5: ModBus RTU 6: Multi-step speed profile	0	○
F9-01	PID control setpoint	0,0% - 100.0%	50,0%	○
F9-02	PID feedback source	0: AI1 1: AI2 2: AI3 3: AI1-AI2 4: HDI input 5: ModBus RTU 6: AI1+AI2 7: Max (|AI1|, |AI2|) 8: Min (|AI1|, |AI2|)	0	○
F9-03	PID control action	0: Positive 1: Negative	0	○
F9-04	PID settings display range	0 - 65535	1000	○
F9-05	Proportional gain Kp1	0,0 - 100,0	20,0	○
F9-06	Integration time Ti1	0,01 s - 10,00 s	2,00 s	○
F9-07	Differentiation time Td1	0,000 s - 10,000 s	0,000 s	○
F9-08	PID controller reverse frequency cutoff	0,00 - F0-10 (max frequency)	0,00 Hz	○

Code	Name	Values	Default	CS
F9-09	PID deviation limit	0,0% - 100.0%	0,0%	○
F9-10	PID differential amplitude	0,00% - 100,00%	0,10%	○
F9-11	PID setpoint filter time	0,00 - 650,00 s	0,00 s	○
F9-12	PID feedback filter time	0,00 - 60,00 s	0,00 s	○
F9-13	PID output frequency filter time	0,00 - 60,00 s	0,00 s	○
F9-14	Reserved			○
F9-15	Proportional gain Kp2	0,0 - 100,0	20,0	○
F9-16	Integration time Ti2	0,01 s - 10,00 s	2,00 s	○
F9-17	Differentiation time Td2	0,000 s - 10,000 s	0.000 s	○
F9-18	PID controller profile switching	0: No switching 1: Switching via terminals 2: Automatic switching depending on deviation	0	○
F9-19	Deviation 1 for switching PID profile	0,0% - F9-20	20,0%	○
F9-20	Deviation 2 for switching PID profile	F9-19 - 100,0%	80,0%	○
F9-21	PID controller initial setpoint	0,0% - 100.0%	0,0%	○
F9-22	PID controller initial setpoint hold time	0,00 - 650,00s	0,00s	○
F9-23	Forward maximum deviation	0,00% - 100,00%	1,00%	○
F9-24	Reverse maximum deviation	0,00% - 100,00%	1,00%	○
F9-25	PID controller integration	Units digit: disable integration 0: No 1: Yes Tens digit: disable integration after reaching maximum output frequency setpoint 0: Continue 1: Disable	00	○
F9-26	Feedback loss detection	0,0%: Do not detect 0,1% - 100,0%	0,0%	○
F9-27	Feedback loss detection	0,0 s - 20,0 s	0,0 s	○
F9-28	PID controller stop	0: PID stop after motor stop 1: PID continue after motor stop	1	○

Code	Name	Values	Default	CS
FA Group: Frequency converter errors				
FA-00	Motor overload protection	0: No 1: Yes	1	○
FA-01	Motor overload protection ratio	0,20 - 10,00	1,00	○
FA-02	Motor overload warning ratio	50% - 100%	80%	○
FA-03	Stall over-voltage ratio	0 - 100	20	○
FA-04	Stall DC over-current level during deceleration	120% - 150%	135%	○
FA-05	Stall over-current ratio	1 - 100	20	○
FA-06	Stall over-current setpoint	100% - 200%	170%	○
FA-07	Enable earth fault protection at power-on	0: No 1: Yes	1	○
FA-08	Over-current limit	0: No 1: Yes	0	○
FA-09	Error auto-clear attempts	0 - 20	0	○
FA-10	DO output on error auto-clear	0: No action 1: Send signal	0	○
FA-11	Error auto-clear restart	0,1 s - 100,0 s	1,0 s	○
FA-12	Input phase loss protection	0: No 1: Yes	1	○
FA-13	Output phase loss protection	0: No 1: Yes	1	○
FA-14	First error type	0: No error 1: Reserved 2: Acceleration over-current 3: Deceleration over-current 4: Constant load over-current 5: Acceleration over-voltage 6: Deceleration over-voltage 7: Constant speed over-voltage 8: Buffer resistor overload 9: Under-voltage 10: Converter overload 11: Motor overload 12: Input phase loss 13: Output phase loss 14: IGBT overheating 15: External error 16: Communication error 17: Contactor error 18: Current detection error 19: Autoconfig error 20: Reserved 21: Error writing/ reading parameters 22: Converter hardware error 23: Motor winding short circuit to ground 24: Reserved 25: Reserved 26: Total motor runtime reached 27: Reserved 28: Reserved 29: Total time online reached 30: Zero-load operation 31: PID feedback signal lost 40: Fast current time limit exceeded 41: Motor switching while running 42-51: Reserved	–	●
FA-15	Second error type		–	●
FA-16	Third (last) error type		–	●
FA-17	Third (last) error frequency	–	–	●
FA-18	Third (last) error current	–	–	●
FA-19	Third (last) error bus voltage	–	–	●
FA-20	Third (last) error input terminals status	–	–	●
FA-21	Third (last) error output terminals status	–	–	●
FA-22	Third (last) error converter status	–	–	●
FA-23	Third (last) error power-on time	–	–	●
FA-24	Third (last) error total running time	–	–	●
FA-25-FA-26	Reserved			
FA-27	Second error frequency	–	–	●
FA-28	Second error current	–	–	●
FA-29	Second error bus voltage	–	–	●
FA-30	Second error input terminals status	–	–	●
FA-31	Second error output terminals status	–	–	●
FA-32	Second error converter status	–	–	●
FA-33	Second error power-on time			●
FA-34	Second error running time			●
FA-37	First error frequency			●
FA-38	First error current			●
FA-39	First error bus voltage			●

Code	Name	Values	Default	CS
FA-40	First error input terminals status			●
FA-41	First error output terminals status			●
FA-42	First error converter status			●
FA-43	First error power-on time			●
FA-44	First error running time			
FA-45-FA-58	Reserved			
FA-59	Instant power off	0: No 1: Decelerate 2: Decelerate to full stop	0	○
FA-60	Instant power off acceleration frequency			
FA-61	DC Voltage recovery delay	0,00 s - 100,00 s	0,50 s	○
FA-62	Minimum DC bus voltage	60,0% - 100,0%	80,0%	○
FA-63	Zero-load protection	0: No 1: Yes	0	○
FA-64	Minimum load level	0,0% - 100,0%	10,0%	○
FA-65	Zero-load detection time	0,0 - 60,0 s;	1,0 s	○
FA-66-FA-70	Reserved			

Code	Name	Values	Default	CS
Group FB: Wobble frequency, winding length, counter				
FB-00	Frequency wobble mode	0: Relative to frequency setpoint 1: Relative to maximum frequency	0	○
FB-01	Wobble frequency amplitude	0,0% - 100.0%	0,0%	○
FB-02	Wobble frequency drop amplitude	0,0% - 50,0%	0,0%	○
FB-03	Wobble frequency cycle time	0,1 s - 3000,0 s	10,0 s	○
FB-04	Wobble frequency increase cycle	0,1% - 100,0%	50,0%	○
FB-05	Winding length setpoint	0 m - 65535 m	1000m	○
FB-06	Actual winding length	0 m - 65535 m	0m	○
FB-07	Pulses per meter	0,1 - 65535	100,0	○
FB-08	Maximum counter setpoint	1 - 65535	1000	○
FB-09	Counter setpoint	1 - 65535	1000	○

Code	Name	Values	Default	CS
Group FC: ModBus RTU communication settings				
FC-00	Communication rate	0: 300 b/sec 1: 600 b/sec 2: 1200 b/sec 3: 2400 b/sec 4: 4800 b/sec 5: 9600 b/sec 6: 19200 b/sec 7: 38400 b/sec 8: 57600 b/sec 9: 115200 b/sec	5	○
FC-01	Data Format	0: No check (8-N-2) 1: Even parity check (8-E-1) 2: Odd parity check (8-O-1) 3: No check (8-N-1)	2	○
FC-02	Converter address	1 - 249	1	○
FC-03	Response delay	0 ms - 20 ms	2 ms	○
FC-04	Communication timeout	0,0 (not applicable) 0,1 s - 60,0 s	0,0	○
FC-05	Communication protocol type	0: Non-standard MODBUS protocol 1: Standard MODBUS protocol	1	○
FC-06	Current resolution in MODBUS mode	0: 0,01 A 1: 0,1 A	0	○

Code	Name	Values	Default	CS
Group FD: Multi-step mode and sequential PLC				
FD-00	Multi-step setpoint 0	-100.0% ... 100.0%	0,0%	○
FD-01	Multi-step setpoint 1	-100.0% ... 100.0%	0,0%	○
FD-02	Multi-step setpoint 2	-100.0% ... 100.0%	0,0%	○
FD-03	Multi-step setpoint 3	-100.0% ... 100.0%	0,0%	○
FD-04	Multi-step setpoint 4	-100.0% ... 100.0%	0,0%	○
FD-05	Multi-step setpoint 5	-100.0% ... 100.0%	0,0%	○
FD-06	Multi-step setpoint 6	-100.0% ... 100.0%	0,0%	○
FD-07	Multi-step setpoint 7	-100.0% ... 100.0%	0,0%	○
FD-08	Multi-step setpoint 8	-100.0% ... 100.0%	0,0%	○
FD-09	Multi-step setpoint 9	-100.0% ... 100.0%	0,0%	○
FD-10	Multi-step setpoint 10	-100.0% ... 100.0%	0,0%	○
FD-11	Multi-step setpoint 11	-100.0% ... 100.0%	0,0%	○
FD-12	Multi-step setpoint 12	-100.0% ... 100.0%	0,0%	○
FD-13	Multi-step setpoint 13	-100.0% ... 100.0%	0,0%	○
FD-14	Multi-step setpoint 14	-100.0% ... 100.0%	0,0%	○
FD-15	Multi-step setpoint 15	-100.0% ... 100.0%	0,0%	○

Code	Name	Values	Default	CS
FD-16	PLC operation mode	0: Stop after one cycle 1: Maintain frequency after one cycle 2: Re-cycle	0	○
FD-17	PLC state memory	Units digit: save to memory on power off 0: Don't save 1: Save Tens digit: save to memory when stopped 0: Don't save 1: Save	00	○
FD-18	0th step running time	0,0 s (h) - 6500,0 s (h)	0,0 s (h)	○
FD-19	0th step acceleration/ deceleration time	0 - 3	0	○
FD-20	1st step running time	0,0 s (h) - 6500,0 s (h)	0,0 s (h)	○
FD-21	1st step acceleration/ deceleration time	0 - 3	0	○
FD-22	2nd step running time	0,0 s (h) - 6500,0 s (h)	0,0 s (h)	○
FD-23	2nd step acceleration/ deceleration time	0 - 3	0	○
FD-24	3rd step running time	0,0 s (h) - 6500,0 s (h)	0,0 s (h)	○
FD-25	3rd step acceleration/ deceleration time	0 - 3	0	○
FD-26	4th step running time	0,0 s (h) - 6500,0 s (h)	0,0 s (h)	○
FD-27	4th step acceleration/ deceleration time	0 - 3	0	○
FD-28	5th step running time	0,0 s (h) - 6500,0 s (h)	0,0 s (h)	○
FD-29	5th step acceleration/ deceleration time	0 - 3	0	○
FD-30	6th step running time	0,0 s (h) - 6500,0 s (h)	0,0 s (h)	○
FD-31	6th step acceleration/ deceleration time	0 - 3	0	○
FD-32	7th step running time	0,0 s (h) - 6500,0 s (h)	0,0 s (h)	○
FD-33	7th step acceleration/ deceleration time	0 - 3	0	○
FD-34	8th step running time	0,0 s (h) - 6500,0 s (h)	0,0 s (h)	○
FD-35	8th step acceleration/ deceleration time	0 - 3	0	○
FD-36	9th step running time	0,0 s (h) - 6500,0 s (h)	0,0 s (h)	○
FD-37	9th step acceleration/ deceleration time	0 - 3	0	○
FD-38	10th step running time	0,0 s (h) - 6500,0 s (h)	0,0 s (h)	○

Code	Name	Values	Default	CS
FD-39	10th step acceleration/ deceleration time	0 - 3	0	○
FD-40	11th step running time	0,0 s (h) - 6500,0 s (h)	0,0 s (h)	○
FD-41	11th step acceleration/ deceleration time	0 - 3	0	○
FD-42	12th step running time	0,0 s (h) - 6500,0 s (h)	0,0 s (h)	○
FD-43	12th step acceleration/ deceleration time	0 - 3	0	○
FD-44	13th step running time	0,0 s (h) - 6500,0 s (h)	0,0 s (h)	○
FD-45	13th step acceleration/ deceleration time	0 - 3	0	○
FD-46	14th step running time	0,0 s (h) - 6500,0 s (h)	0,0 s (h)	○
FD-47	14th step acceleration/ deceleration time	0 - 3	0	○
FD-48	14th step running time	0,0 s (h) - 6500,0 s (h)	0,0 s (h)	○
FD-49	15th step acceleration/ deceleration time	0 - 3	0	○
FD-50	PLC running time unit	0:s (seconds) 1: h (hour)	0	○
FD-51	Reference source for step 0 of multi-step control	0: FD-00 1: AI1 2: AI2 3: AI3 4: HDI 5: PID control 6: Frequency setpoint (F0-08)	0	○
FD-52	Reference source for step 3 of multi-step control	0: FD-03 1: AI1 2: AI2 3: Control panel potentiometer 4: HDI 5: PID control 6: Frequency setpoint (F0-08)	0	○
FD-53	Reference source for step 6 of multi-step control	0: FD-06 1: AI1 2: AI2 3: Control panel potentiometer 4: HDI 5: PID control 6: Frequency setpoint (F0-08)	0	○
FD-54	Reference source for step 9 of multi-step control	0: FD-09 1: AI1 2: AI2 3: Control panel potentiometer 4: HDI 5: PID control 6: Frequency setpoint (F0-08)	0	○

Code	Name	Values	Default	CS
FD-55	Reference source for step 12 of multi-step control	0: FD-12 1: AI1 2: AI2 3: Control panel potentiometer 4: HDI 5: PID control 6: Frequency setpoint (F0-08)	0	○

Code	Name	Values	Default	CS
7.15 FE: Torque control settings				
FE-00	Speed/Torque control selection	0: Speed control 1: Torque control	0	○
FE-01	Torque control source	0: Setpoint (FE-03) 1: AI1 2: AI2 3: AI3 4: HDI 5: RS-485 6: Min. (AI1, AI2) 7: Max. (AI1, AI2)	0	○
FE-02	Reserved			
FE-03	Torque setpoint	-200,0% ... 200,0%	150,0%	○
FE-04	PWM control	0: Not in use 1: In use	0	○
FE-05	Max. forward frequency in torque control mode	0,00 Hz - F0-10 (Max. frequency)	50,00 Hz	○
FE-06	Max. reverse frequency in torque control mode	0,00 Hz - F0-10 (Max. frequency)	50,00 Hz	○
FE-07	Acceleration time in torque control mode	0,00 s - 65000 s	0,00 s	○
FE-08	Deceleration time in torque control mode	0,00 s - 65000 s	0,00 s	○
FE-09	Static friction compensation	0,0 % - 200,0 %	0,0 %	○
FE-10	Static friction compensation cutoff frequency	0,00 Hz - F0-10 (max. frequency)	0,0 %	○
FE-11	Sliding friction compensation	0,0 % - 200,0 %	0,0 %	○
FE-12	Rotary inertia compensation	0,0 % - 200,0 %	0,0 %	○
FE-13	Acceleration time for rotary inertia compensation	0,00 s - 65000 s	0 s	○
FE-14	Deceleration time for rotary inertia compensation	0,00 s - 65000 s	0 s	○
FE-15	Switching frequency upper limit	0,00 Hz - 15,00 Hz	12,00 Hz	○
FE-16	PWM control mode	0. Asynchronous mode 1. Synchronous mode	0	○

Code	Name	Values	Default	CS
FE-17	Dead zone compensation	0. No compensation 1. Compensation mode 1 2. Compensation mode 2	1	○
FE-18	PWM random distribution depth	0: No random distribution 1-10: random PWM depth	0	○
FE-19	Fast current limit	0: No 1: Yes	1	○
FE-20	Current detection compensation	0-100	5	○
FE-21	SVC optimization	0. No optimization 1. Optimization mode 1 2. Optimization mode 2	1	○
FE-22	Undervoltage setpoint	60% - 140%	80%	○

The list of controlled settings is given in the table below:

Function code	Name	Minimum value
Group U0: Primary controlled settings		
U0-00	Running frequency	0,01 Hz
U0-01	Frequency setpoint	0,01 Hz
U0-02	DC bus voltage	0,1 V
U0-03	Output voltage	1 V
U0-04	Output current	0,01 A
U0-05	Output power	0,1 kW
U0-06	Output torque	0,1%
U0-07	Input terminals status	1
U0-08	Output terminals status	1
U0-09	AI1 voltage	0,01 V
U0-10	AI2 voltage	0,01 V
U0-11	AI3 voltage	0,01 V
U0-12	Counter value	1
U0-13	Length value	1
U0-14	Load speed	1
U0-15	PID controller setpoint	1
U0-16	PID controller feedback	1
U0-17	PLC stages	1
U0-18	HDI input frequency	0,01 kHz
U0-19	Feedback speed (0.1 Hz step)	0,1 Hz
U0-20	Remaining running time	0,1 min
U0-21	Voltage prior to AI1 calibration	0,001 V
U0-22	Voltage prior to AI2 calibration	0,001 V
U0-23	Voltage prior to AI3 calibration	0,001 V
U0-24	Linear speed	1 m/min
U0-25	Current time online	1 min
U0-26	Current running time	0,1 min
U0-27	Reserved	
U0-28	Communication setpoint	0,01%
U0-29	Reserved	
U0-30	Primary frequency A display	0,01 Hz
U0-31	Secondary frequency B display	0,01 Hz

7 Settings description

7.1 Group F0: basic settings

F0-00

Name: Converter model

Default value: 1 (Model G)

Value range:

1: Model G: regular constant torque model.

2: Model P: specialized model for pump and fan applications

Please note: This setting cannot be changed. Users can operate the VECTOR-100 frequency converter as P model. No changing of any settings is required.

F0-01

Name: Control Mode

Default value: 2 Volt-frequency control U/f

Value range:

0: Sensorless vector control

Widely used for applications requiring high torque at low speed, speed precision and fast dynamic response. Scope of application: machine tools, injection molding machines, centrifuges, drawing machines, etc.

1: Reserve

2: Volt-frequency control (U/f)

Used for standard tasks such as controlling pumps, fans, etc.

ATTENTION!

To correctly operate in vector mode, enter the valid motor data and perform auto-config.

By changing the settings in the F3 group, you can fine-tune the operation in vector mode.

F0-02

Name: Control command source

Default value: 0 Control panel

Value range:

0: Control panel

Use "RUN" and "STOP/RESET" buttons to issue commands.

1: Terminals

Commands: forward rotation, reverse rotation, forward jog, reverse jog, etc., controlled via multi-functional inputs

2: RS-485 (Modbus) serial communication port

Commands will be sent to the converter via the RS-485 communication interface.

F0-03

Name: Primary frequency source A selection

Default value: 1 Control panel potentiometer

Value range:

0: Control panel

In this mode, when the converter is turned on, the value of F0-08 is used as the frequency setpoint. Frequency setpoint can be changed using the "▲" and "▼" buttons, but it will not be saved when the power to the device is turned off.

1: Control panel potentiometer

In this mode, control panel potentiometer will be used as the source of frequency setpoint, max value of the potentiometer corresponds to the value of F0-12.

2: AI1 (0-10V / 4-20mA)

The frequency is set by analog input. Each analog input of the VECTOR-100 frequency can accept 0-10V voltage input signal and a 4-20mA current input signal. Switching between voltage/current mode is done using the corresponding jumper switch on the control panel.

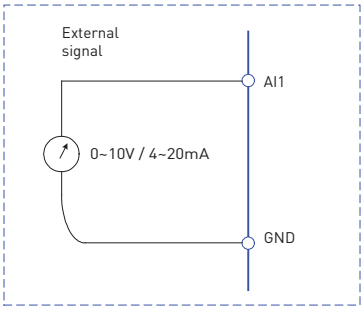

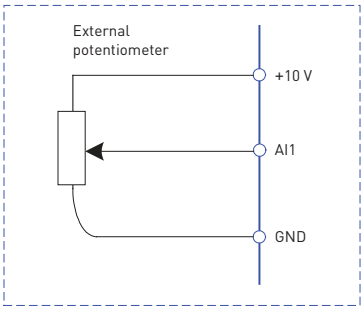

3: AI2 (0-10V / 4-20mA)

Same as 2: AI1 (0-10V / 4-20mA)

4: AI3 (0-10V / 4-20mA)

Same as 2: AI1 (0-10V / 4-20mA)

5: High Speed HDI Input

The HDI input is designed for high speed pulse signal with the maximum frequency of 100,0 kHz.
Note: If F0-03 = 4, HDI is used as a high speed pulse input terminal.
If F0-03 ≠ 4, HDI terminal is used as digital input, with function set by F5-06.

6: Multi-step job

In multi-step mode, combinations of different MI input states correspond to different setpoints. The VECTOR-100 frequency converter supports a maximum of 16 steps, determined by 16 combinations of states of the four MI inputs (with their function determined by setting their function to 12 - 15 in Group F5). The value is a percentage of F0-10 (maximum frequency).

If a MI terminal is to be used for multi-step mode, make the appropriate settings in Group F5.

7: Serial PLC

Frequency setpoint is determined by the integrated serial PLC. See Group FD settings for more information.

8: PID controller

Frequency setpoint is determined by the calculation results of the integrated PID controller. See Group F9 settings for more information.

9: RS-485

Frequency setpoint is transmitted from the master device over the RS-485 interface via ModBus RTU protocol. See Group F9 settings and Section 9 of this manual for more information.

F0-04

Name: Auxiliary frequency source B selection

Default value: 0

Value range:

0: Control panel

(F0-08, momentary "▼" and "▲" adjustable, without saving to device configuration)

1: Frequency set using control panel

2: AI1 (0-10V)

3: AI2 (0-10V / 4-20mA)

4: AI3

5: High Speed HDI Input

6: Multi-step speed profile

7: Serial PLC

8: PID controller

9: RS-485

When the auxiliary frequency source is used as an independent frequency setpoint (i.e. switching the frequency source from A to B), it is used in the same way as the main frequency source A. For details, see parameter F0-03.

When the auxiliary frequency source is used as the calculation result, please be mindful of the following:

If the auxiliary frequency source is analog input (AI1, AI2 and AI3), 100% of the input signal corresponds to the auxiliary frequency source range (see F0-05 and F0-06).

ATTENTION! The values of F0-03 and F0-04 cannot be the same.

F0-05

Name: Maximum frequency source B

Default value: 0

Value range:

0: Max. frequency

1: Frequency A (see F0-03)

F0-06

Name: Auxiliary frequency source B range

Default value: 100%

Value range: 0% - 150%

When the frequency source selection is determined by a combination of setpoints (F0-07 is set to 1, 3 or 4), two parameters F0-05 and F0-06 are used to determine the range of the auxiliary frequency source.

Auxiliary frequency B = Auxiliary frequency A*F0-06. When F0-05 is set to 1 (Frequency A):

F0-07

Name: Frequency source selection

Default value: 00 (Primary frequency source: A; ratio between frequencies A and B: A+B)

Value range:

➢ **Units digit: frequency source selection**

0: Primary frequency source A

The frequency source is determined by the frequency source F0-03.

1: Results of calculating frequency A and B (determined using the tens digit)

2: Switching between A and B

If the multi-function input terminal (F5-0X=18: Primary frequency source switch) has no signal, set frequency = A.

When multi-function input terminal (F5-0X=18: Primary frequency source switch) has signal, set frequency = B.

3: Switching between A and calculation result.

When the multi-function input terminal (F5-0X=18: Primary frequency source switch) has no signal, set frequency = A.

When the multi-function input terminal (F5-0X=18: Primary frequency source switch) has signal, set frequency = calculation result.

4: Switching between B and calculation result.

When the multi-function input terminal (F5-0X=18: Primary frequency source switch) has no signal, set frequency = B.

When the multi-function input terminal (F5-0X=18: Primary frequency source switch) has signal, set frequency = calculation result.

➢ **Tens digit: calculatingthe relationship between frequencies A and B**

0: A + B
Frequency setpoint is A + B.

1: A - B
Frequency setpoint is A - B

2: Max. (A, B)
Frequency setpoint is max. (A, B)

3: Min. (A, B)
Frequency setpoint is min. (A, B)

ATTENTION! When frequency source calculation A and B is selected as the frequency setpoint, the offset frequency can be adjusted using setting F0-21. In order to meet different requirements, an offset frequency can be added based on the calculation result of frequency sources A and B.

F0-08

Name: Control panel frequency setpoint

Default value: 50,00 Hz

Value range: 0,00 Hz - F0-10 (maximum frequency)

When F0-03 = 0, this value will be the starting value for frequency setting.

F0-09

Name: Motor rotation

Default value: 0 (Forward)

Value range:

0: Forward

1: Back

Rotational direction of the motor can be changed by this setting, without changing the motor connection. Changing this setting is equivalent to exchanging any two phases U, V, W of the motor.

Note:

The motor will continue to run in the original direction after the setting is initialized. Do not use this function in applications where changing the rotational direction of the motor is prohibited after the system has been fully commissioned.

F0-10

Name: Max. frequency

Default value: 50,00 Hz

Value range: 50,00 Hz - 600,00 Hz

Maximum frequency F0-10 is the maximum permissible output frequency of the cobverter. This parameter is used to calculate steps in multi-step mode and the ratios of input and output analog signals.

The maximum output frequency of the VECTOR-100 frequency converter is 600 Hz.

When F0-22=1, frequency resolution is 0,1 Hz, Value range of F0-10: 50,0Hz - 600,0 Hz;

When F0-22=2, frequency resolution is 0,01 Hz, Value range of F0-10: 50,0 Hz - 60,00 Hz.

F0-11

Name: Upper frequency limit source

Default value: 0

Value range:

0: F0-12

1: AI1

2: AI2

3: AI3

4: HDI

5: RS-485

100% of analog input corresponds to F0-12.

ATTENTION!

The upper frequency limit must be set higher than the maximum frequency.

The output frequency must not exceed the upper frequency limit.

F0-12

Name: Upper frequency limit

Default value: 50,00 Hz

Value range: F0-14 (lower frequency limit) - F0-10 (max. frequency)

F0-13

Name: Upper frequency limit offset

Default value: 0,00 Hz

Value range: 0,00 Hz - F0-10 (max frequency)

When the upper frequency limit is set by an analog input, F0-13 represents the setpoint offset. The combination of this frequency offset and F0-11 is used as the frequency upper limit value.

F0-14

Name: Lower frequency limit

Default value: 0,00 Hz

Value range: 0,00 Hz - F0-10 (max frequency)

If the frequency setpoint is lower than the lower frequency limit, the inverter can stop running, run at the lower frequency limit, or run at zero speed. The operating mode is determined by setting F8-14.

F0-15

Name: Carrier frequency

Default value: depends on the model

Value range: 0,5 kHz - 16,0 kHz

The factory setting is optimal in most cases. Changing this setting is not recommended.

At lower carrier frequency, the converter output current generates higher harmonics, motor losses, temperature and noise increase, but the converter temperature and its leakage current and noise become lower or non-existent.

At higher carrier frequency, the temperature of the converter increases, the leakage current and interference with other devices is greater. However, motor losses and output line noise will be reduced, and the motor temperature will be lower.

Carrier frequency affectsthe following characteristics:

Carrier frequency	Lower → Higher
Motor noise	Higher → Lower
Output current waveform	Worse → Better
Motor temperature	Higher → Lower
Converter temperature	Lower → Higher
Leakage current	Lower → Higher
External noise	Lower → Higher

F0-16

Name: Temperature-dependent carrier frequency adjustment

Default value: 0

Value range:

0: No

1: Yes

The frequency converter can automatically adjust the carrier frequency according to the heat sink temperature. If the heatsink temperature is too high, it will change the carrier frequency to reduce the temperature. The carrier frequency will gradually increase to the setpoint value after the heatsink temperature decreases.

This feature significantly reduces the efficiency of converter overheating monitoring.

F0-17

Name: Acceleration time 1

Default value: depends on the model

Value range: 0,00 s - 65000 s

F0-18

Name: Deceleration time 1

Default value: depends on the model

Value range: 0,00 s - 65000 s

Acceleration time refers to the time required to accelerate to F0-24 frequency setpoint from zero frequency, while the deceleration time refers to the time required to decelerate to zero frequency from the F0-24 setpoint.

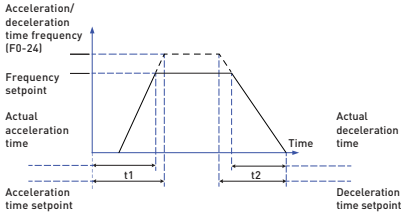

VECTOR-100 frequency converter supports 4 groups of acceleration/deceleration times, which can be selected using multi-functional digital inputs.

Group 1: F0-17, F0-18;

Group 2: F8-03, F8-04;

Group 3: F8-05, F8-06;

Group 4: F8-07, F8-08.

F0-19

Name: Acceleration/Deceleration time units

Default value: 1

Value range:

0: 1 s

1: 0,1 s

2: 0,01 s

VECTOR-100 series inverter supports 3 acceleration/deceleration time units: 1s, 0,1s and 0,01s.

ATTENTION! Depending on the value of this parameter, the number of decimal places in the settings responsible for acceleration and deceleration times shifts and, accordingly, the values of these settings change.

F0-21

Name: Secondary frequency source offset when combined

Default value: 0,00 Hz

Value range: 0,00 Hz - F0-10 (max frequency)

This setting is used when the command frequency is the calculation result between souurces A and B.

If the value is non-zero, the final frequency setpoint will be calculated as F0-21 + Frequency A + Frequency B when F0-07 = 10.

F0-22

Name: Control frequency resolution

Default value: 2 (0,01 Hz)

Value range:

1: 0,1Hz

2: 0,01 Hz

This parameter determines the resolution of all frequency-related settings.

When frequency resolution = 0,1 Hz, max. output frequency setting = 6000,0 Hz. When frequency resolution = 0,01Hz, max. output frequency setting = 600,0 Hz.

ATTENTION!

Changing this parameter affects the order of magnitude (decimal place) of all frequency-related settings and the corresponding frequency value.

F0-23

Name: Frequency memory mode

Default value: 0: (Disabled)

Value range:

This function is only effective when the frequency source is specified with F0-08.

0: "Disabled" means that the frequency adjustments made via the control panel will be set back to the value of F0-08 after the converter stops. Any frequency changes, made using "▲", "▼" buttons, or digital input terminals, will be reset.

1: "Enabled" means that the frequency adjustments, made by using the "▲", "▼" buttons, or digital input terminals, will not be reset after the converter stops.

F0-24

Name: Acceleration/deceleration time frequency

Default value: 0 (F0-10: max. frequency)

Value range:

0: F0-10 (max. frequency)

1: Frequency setpoint

2: 100 Hz

Acceleration/Deceleration time is calculated as the time required to change the frequency from 0 Hz to the frequency set by F0-24, and vice versa.

When F0-24=1, the acceleration/deceleration time is tied to the frequency setpoint. The change in acceleration/deceleration of the motor will depend on any changes to the the frequency setpoint.

F0-25

Name: Running frequency UP/DOWN control reference

Default value: 0 (Running frequency)

Value range:

0: Running frequency

1: Frequency setpoint

This function only works if the frequency is set from the control panel.

It is used to confirm which frequency will change when pressing "▲", "▼" buttons or using digital inputs. I.e., it will change whether the frequency will change based on the running frequency or frequency setpoint.

F0-26

Name: Control and frequency source combination

Default value: 000

Value range:

➢ Units digit: combination of control panel commands and a frequency source at F0-02=0

0: No combination

1: Frequency set using control panel

2: AI1

3: AI2

4: AI3

5: High Speed HDI Input

6: Multi-step speed profile

7: Serial PLC

8: PID controller

9: RS-485

➢ Tens digit: combination of terminals as control source and frequency source at F0-02=1; setting values same as for units digit

➢ Hundreds digit: combination of comm channel as control source and frequency source at F0-02=2; setting values same as for units digit

This setting enables you to configure the value of the command frequency source depending on the specified source of the start-stop command.

For example: If F0-26=013, then

(1) F0-02=0 - when starting the converter via the buttons on the control panel, the source of the frequency is determined using AI2 signals (4-20 mA)

(2) If F0-02=1, when starting via terminals MI1-MI5, the frequency set by the setpoint (F0-08)

(3) If F0-02=2, when starting via RS-485 interface, the frequency setpoint source is determined by F0-03... F0-07.

F0-27

Name: Reset settings

Default value: 0 (No action specified)

Value range:

0. No action specified

1. Reset groups F0 and F1 to default settings

When F0-27=1, group F0 and F1 settings will be reset to default values.

2. Reset error history

If F0-27 =2, all error records in group F7 will be deleted.

3. Reset device to factory settings

If F0-27 =3, all settings will be reset to default values

7.2 Group F1: Start and stop control

F1-00

Name: Start mode

Default value: 0 (Direct starting)

Value range:

0: Direct starting

The converter starts to operate directly from the starting frequency (F1-03).

1: RPM detection restarting

The converter will detect the motor speed and direction and start tracking the frequency. This leads to a smoother start of the motor and speed adjustment. It applies to a restart after a shutdown under a high inertial load. To ensure correct frequency tracking, set the correct motor parameters in group F2.

2: Pre-excitation starting

The converter will initially supply DC current and then start the motor at the starting frequency. See descriptions of F1-05 and F1-06. This mode is well suited for motors with low inertial loads and reverse applications.

F1-01

Name: RPM detection

Default value: 0 (Search from stop frequency)

Value range:

To quickly detect the current speed motor speed, select the appropriate detection mode:

0: Search from stop frequency. The default value commands the converter is to start searching from the last frequency before the stop command.

1: Search from zero. Useful when starting after a long stop.

2: Search from maximum frequency. Used for short-term stopping of loads with high inertia or external force, for example, with a generator load.

F1-02

Name: RPM detection resolution

Default value: 20

Value range: 1 - 100

Dimensionless value, at F1-00=1 this setting is used to select the detection resolution.

The higher the setting, the faster the detection. However, too high of a value might cause incorrect RPM detection.

F1-03

Name: Starting frequency

Default value: 0,00 Hz

Value range: 0,00 Hz - 10,00 Hz

F1-04

Name: Starting frequency hold time

Default value: 0,0 s

Value range: 0,0 s - 100,0 s

- Setting the correct starting frequency can improve the starting torque.
- If the frequency is set lower than the starting frequency, the converter will remain in standby mode, and there will be no output voltage.
- The starting frequency can be less than the lower frequency limit (F0-14)
- F1-03 and F1-04 have no effect during change in rotation direction.

Example 1:

F0-03 = 0

F0-08 = 2,00 Hz Frequency setpoint 2,00 Hz

F1-03 = 5,00 Hz Starting frequency 5,00 Hz

F1-04 = 2,0 s Starting frequency hold time 2,0 s.

In this case, the converter will be in standby mode and the output frequency will be 0 Hz.

Example 2:

F0-03 = 0

F0-08 = 10,00 Hz Frequency setpoint 10,00 Hz

F1-03 = 5,00 Hz Starting frequency 5,00 Hz

F1-04 = 2,0 s Starting frequency hold time 2,0 s.

In this case, the converter accelerates to 5 Hz and maintains it for 2 seconds, then accelerates to 10 Hz.

F1-05

Name: DC braking before starting. Pre-excitation current

Default value: 0%

Value range: 0% - 100%

F1-06

Name: DC braking before starting. Pre-excitation time

Default value: 0,0 s

Value range: 0,0 s - 100,0 s

DC braking is used to stop and restart a running motor. Pre-excitation is used to create a magnetic field in the windings of an induction motor and then start it.

DC braking is only possible under direct starting. The converter will first perform DC braking according to the setting F1-05, and will start running after the time specified in F1-06 has elapsed. If DC braking time is set to 0, the converter will start running immediately after braking. The higher the braking current, the greater the braking force.

If the selected starting mode is pre-excitation starting, the converter first generates a magnetic field according to the pre-excitation current setpoint and starts running after the pre-excitation time has elapsed. If the pre-excitation time is set to 0, the converter starts immediately.
The DC braking current before starting is determined as a percentage of the converter rated current

F1-07

Name: Acceleration/Deceleration mode

Default value: 0 (Linear acceleration/deceleration)

Value range:

This setting is used to select the frequency change method during starting and stopping of the converter.

0: Linear acceleration/deceleration

The output frequency accelerates and decelerates linearly. The inverter has 4 types of acceleration/deceleration times, which can be set via digital input parameters F5-00 - F5-04 (values 16, 17).

1: S-shaped acceleration/deceleration curve, type A

The output frequency accelerates or decelerates according to an S-curve pattern. Suitable for applications requiring smooth starting and stopping, such as winch or conveyor belt drives.

2: S-shaped acceleration/deceleration curve, type B

In this mode, the motor rated frequency f_b, set in F2-04, is always the exact inflection point of the S-curve. This curve is suitable for applications where the running frequency is higher than the rated frequency and fast acceleration/deceleration is required.

When the set frequency exceeds the rated frequency, the acceleration/deceleration timeis calculated as follows:

$$t=(\frac{4}{9}\times(\frac{f}{f_b})^2+\frac{5}{9})\times T$$

where f = set frequency, f_b = motor rated frequency, T = acceleration time from 0 Hz to rated frequency.

F1-08

Name: Initial S-curve time

Default value: 30,0%

Value range: 0,0% - (100,0% - F1-09)

F1-09

Name: Final S-curve time

Default value: 30,0%

Value range: 0.0% - (100,0% - F1-08)

The values of settings F1-08 and F1-09 determine the start and end times of the S-shaped acceleration/deceleration curve type A. The total value of F1-08 + F1-09 ≤ 100%.

The time t1 is set by F1-08, during this time the output frequency slope gradually increases.

Time t2 is set by F1-09, during which time the output frequency slope gradually decreases to 0. Between t1 and t2, the acceleration is linear.

All percentages in this settings refer to the current acceleration/deceleration time.

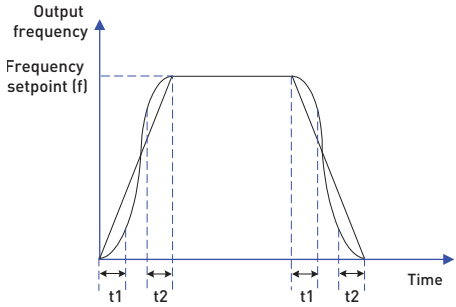

Figure A: S-curve type A acceleration/deceleration profile diagram

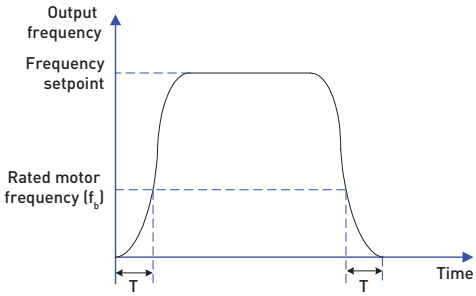

Figure B: S-curve type B acceleration/deceleration profile diagram

F1-10

Name: Stop mode

Default value: 0 (Braking)

Value range:

0: Braking

After the stop command is given, the converter reduces the output frequency according to the deceleration time setting.

1: Coasting stop

Once the stop command is given, the converter immediately turns off the output voltage and the motor coasts to a stop.

F1-11

Name: DC braking start frequency after stop

Default value: 0,00 Hz

Value range: 0,00 Hz - F0-10 (max frequency)

When F1-10 is set to 1, the drive starts DC braking when the current frequency is below F1-11.

F1-12

Name: DC braking delay after stop

Default value: 0,0 s

Value range: 0,0 s - 100,0 s

When F1-12 > 0, the converter, after reducing the frequency below than F1-11, will first turn off the output voltage for a time equal to F1-12, and then perform DC braking.

F1-13

Name: DC braking current after stop

Default value: 0,0 %

Value range: 0% - 100%

This setting determines the ratio of the braking current relative to the base value.

If the motor rated current is less than or equal to 80% of the converter rated current, the base value is equal to the motor rated current.

If the motor rated current is greater than 80% of the converter rated current, the base value is 80% of the converter rated current.

F1-14

Name: DC braking time after stop

Default value: 0,0 s

Value range: 0,0 s - 100,0 s

This setting determines the DC braking time. If it is set to 0, DC braking will not be used

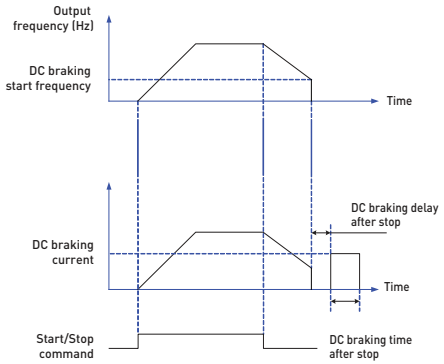

F1-15

Name: Braking ratio

Default value: 100%

Value range: 0% - 100%

This setting is only active for converters with an integrated braking module.

This value regulates the current and, accordingly, the braking force.

The higher the percentage, the higher the braking ratio. DC link voltage changes significantly during braking.

7.3. Group F2: Electric motor settings

F2-00

Name: Motor type

Default value: 0 (Conventional asynchronous motor)

Value range:

0: Conventional asynchronous motor

1: Frequency controlled asynchronous motor

ATTENTION! Frequency controlled asynchronous motors are designed to run at low speeds for an extended period of time. Their cooling fan are driven independently and continue to cool the motor even after the motor is stopped.

F2-01

Name: Motor rated power

Default value: Depends on model

Value range: 0,1 kW - 1000,0 kW

F2-02

Name: Motor rated voltage

Default value: Depends on the model

Value range: 1 V - 2000 V

F2-03

Name: Motor rated current

Default value: Depends on the model

Value range:

0,01 A - 655,35 A (converters up to 55 kW)

0,1A - 6553,5 A (converters over 55 kW)

F2-04

Name: Motor rated frequency

Default value: Depends on the model

Value range: 0,00 Hz - F0-10 (max frequency)

F2-05

Name: Rated motor speed

Default value: Depends on model

Value range: 1 - 65535 RPM

The value is set when operating in both vector and U/f mode, depending on the motor characteristics indicated on the motor nameplate or in the manual.

To set up optimal control, please perform the autoconfig. The accuracy of autoconfig, in turn, depends on entering correct initial settings.

F2-06

Name: Motor stator resistance

Default value: Depends on the model

Value range:

0,001 Ω - 65,535 Ω for models up to 55 kW

0,0001 Ω - 6,5535 Ω for models above 55 kW

F2-07

Name: Motor rotor resistance

Default value: Depends on the model

Value range:

0,001 Ω - 65,535 Ω for models up to 55 kW

0,0001 Ω - 6,5535 Ω for models above 55kW

F2-08

Name: Motor winding inductance

Default value: Depends on the model

Value range:

0,01 mH - 655,35 mH for models up to 55 kW

0,001 mH - 65,535 mH for models over 55 kW

F2-09

Name: Mutual rotor/stator inductance

Default value: Depends on model

Value range:

0,1 mH - 6553,5 mH for models up to 55 kW

0,01 mH - 655,35 mH for models over 55 kW

F2-10

Name: Zero-load current

Default value: Depends on model

Value range:

0,01A - F2-03 (rated current) for models up to 55 kW

0,1A - F2-03 (rated current) for models over 55 kW

Settings F2-06 to F2-10 represent the inherent characteristics of the asynchronous motor. These parameters are usually not indicated on the nameplate or in the motor user manual. They can be determined by autoconfig. Parameters F2-06 to F2-08 can be determined by static autoconfig. The dynamic autoconfig, will obtain phase sequence and PID controller current regulation settings. Whenever Motor rated power (F2-01) or Motor rated voltage (F2-02) are changed, the converter will automatically restore the values of F2-06 to F2-10 to default settings for Wye-connected conventional asynchronous motor.

If dynamic autoconfig fails, please enter these parameters manually, using data provided by the motor manufacturer.

F2-11

Name: Autoconfig

Default value: 0 (no autoconfig)

Value range:

0: No autoconfig

1: Static autoconfig

This setting is used when the motor cannot be disconnected from the load. Before performing static autoconfig, enter the basic motor settings F2-00 - F2-05 using motor nameplate or manual as a reference. In static autoconfig mode the converter will detect settings F2-06 – F2-08 without driving the motor. Set the value to 1, and press "RUN" to perform static autoconfig.

2: Dynamic autoconfig

To perform dynamic autoconfig, disconnect the motor from the load. During the dynamic autoconfig sequence, the converter first performs static autoconfig and then accelerates to 80% of the motor rated frequency within the period specified in F8-07. After this, the converter outputs a constant frequency for a certain time, and then decelerates for a time F8-08..

Before performing dynamic autoconfig full auto-tuning, enter the basic motor settings F2-00 - F2-05 using motor nameplate or manual as a reference.

The converter will detect settings F2-06 through F2-10 during dynamic autoautoconfig.

Set the value to 2, and press "RUN" to perform dynamic autoconfig.

ATTENTION!

1) Make sure that the motor is securely mounted prior to performing autoconfig, otherwise measurement errors may occur.

2) The display will show "TUNE" and the "Forward" indicator will be lit during autoconfig. Once autoconfig is completed, the "Forward" indicator will go off.

3) If autoconfig fails, the display will show "Err19" error code.

7.4 Group F3: Vector control settings

Group F3 settings are only applicable in vector control mode. Correct settings ensure more accurate control over the motor torque when in operation. This group of settings enables configuration of the integral proportional-integral-derivative controller (hereinafter - PID controller), which is used as one of the components of a three-phase AC motor vector control.

F3-00

Name: Speed loop proportional gain 1

Default value: 30

Value range: 1 - 100

F3-01

Name: Speed loop integration time 1

Default value: 0,50 s

Value range: 0,01 s - 10,00 s

F3-02

Name: Low switching frequency

Default value: 5,00 Hz

Value range: 0,00 - F3-05

F3-03

Name: Speed loop proportional gain 2

Default value: 20

Value range: 1 - 100

F3-04

Name: Speed loop integration time 2

Default value: 1,00 s

Value range: 0,01 s - 10,00 s

F3-05

Name: High switching frequency

Default value: 10,00 Hz

Value range: F3-02 - F0-10 (max. frequency)

PID controller speed loop parameters can be separately configured for different output frequencies to optimize performance.

If the running frequency is less than or equal to "Low switching frequency" (F3-02), PID controller will use settings F3-01 and F3-02.

If the running frequency is equal to or greater than "High switching frequency" (F3-05), PID controller will use settings F3-03 and F3-04.

If the running frequency is between F3-02 and F3-05, the speed loop PID settings will be calculated linearly using settings for groups 1 and 2.

The dynamic response characteristic when changing speed in vector mode can be adjusted by the proportional gain and integration time. For the fastest response, increase the proportional gain and reduce the integration time. High proportional gain and low integration time can lead to motor control instability (overshoot or self-induced oscillation).

Recommended setup method:

If the factory settings do not meet the requirements of the process, follow the algorithm below. First increase the proportional gain until the system remains stable and does not self-oscillate, then decrease the integration time to obtain the best response time and minimal overshoot.

ATTENTION!
Incorrect PID controller setup may cause the speed to overshoot, leading to overvoltage during the subsequent down-regulation of speed.

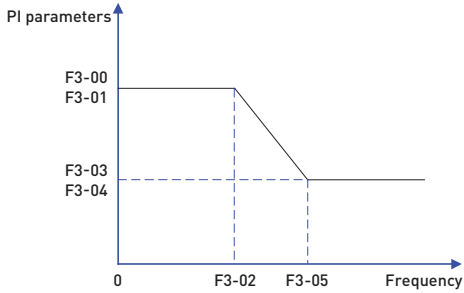

F3-06

Name: Slip compensation

Default value: 100%

Value range: 50% - 200%

This setting is used to adjust the accuracy of motor speed control. If the speed is too low due to significant load on the motor this value should be reduced, and vice versa.

F3-07

Name: Speed loop filter time

Default value: 0,000 s

Value range: 0,000 s - 0.100 s

Sets the filtering time. If there are no specific requirements, there is no need to adjust this setting.

F3-08

Name: Over-excitation compensation

Default value: 64

Value range: 0 - 200

During deceleration, over-excitation compensation can efficiently suppress the DC bus voltage increase. The higher the overexcitation compensation value, the more pronounced the suppression effect will be.

If overvoltage errors occur during deceleration, you may increase this parameter. However, too high of a value may lead to an output current increase.

If there is no significant inertial component during deceleration, this parameter should be set to zero. When using a braking resistor, the overexcitation compensation should also be set to zero.

F3-09

Name: Torque upper limit source for speed control mode

Default value: 0 (F3-10)

Value range:

0: F3-10

1: AI1

2: AI2

3: AI3

4: High Speed HDI Input

5: RS-485

6: Min. (AI1, AI2)

7: Max. (AI1, AI2)

※ The value range 1-7 corresponds to the value range for parameter F3-10.

F3-10

Name: Torque upper limit setting

Default value: 170,0%

Value range: 0,0% - 200,0%

In speed control mode, the motor torque is limited by F3-10.

Parameter F3-09 is used to select the source of the upper torque limit. 100% of F3-10 corresponds to rated torque.

F3-13

Name: Excitation control proportional gain

Default value: 2000

Value range: 0 - 60 000

F3-14

Name: Excitation control integral gain

Default value: 1300

Value range: 0 - 60000

F3-15

Name: Torque control proportional gain

Default value: 2000

Value range: 0 - 60000

F3-16

Name: Torque control integral gain

Default value: 1300

Value range: 0 - 60000

F3-13 - F3-16 represent PID controller settings. They are updated after the converter has performed autoconfig. In most cases there is no need to adjust these settings.

F3-17

Name: Speed Loop Integration

Default value: 0 (not used)

Value range:

Integral separation

0: not used

1: used

7.5 Group F4: U/f control parameters

This group of settings is active only in the scalar U/f (volt-frequency) control mode.

U/f control is typically used for pump and fan loads or in applications where one frequency converter controls multiple motors.

F4-00

Name: U/f curve settings

Default value: 0 (Linear U/f curve)

Value range:

0: Linear U/f curve.

Suitable for conventional constant torque loads.

1: Custom U/f curve.

Suitable for non-conventional loads such as dehydrator and centrifugal machines.

2: Quadratic U/f curve.

Suitable for centrifugal loads such as fans and pumps.

3~8: U/f curves between linear and quadratic:

3: 1,2th power U/f

4: 1,4th power U/f

6: 1,6th power U/f

8: 1,8th power U/f

Suitable for variable torque loads such as blower, pump, etc.

9: Reserve

10: Total U/f separation

In this mode, the output frequency and output voltage of the AC drive are independent. The output frequency is determined by the frequency source, and the output voltage is determined by "U/f separation voltage source" (F4-13). Applicable for induction heating, inverse power supply and motor torque control.

11: Partial U/f separation

In this mode, U and f are proportional, with the ratio source set in F4-13. The relationship between U and f is also dependent on motor rated voltage and motor rated frequency set in Group F2. Let's assume that the voltage source input will be X (0-100%) and the relationship between U and f will be as follows:

U/f=2X (Motor rated voltage) / (Motor rated frequency)

F4-01

Name: Torque Boost

Default value: Depends on model

Possible values:

0: Automatic

0,1% - 30,0%

To compensate for the low-frequency torque characteristics of U/f control, the inverter can boost the output voltage at low frequency. 0% corresponds to automatic torque boost, and the output voltage of the inverter is automatically compensated according to the load current. If the torque boost is set too high, the motor may be overloaded by temperature or current. This may cause motor failure.

This setting must be adjusted to motor load. Increase it for heavier loads and decrease it for lighter loads.

When the torque boost is set to 0,0, boost value will be calculateed automatically.

Torque boost cut-off frequency: at this frequency, torque boost will still be active. When the frequency exceeds the cut-off setting, torque boost will be disabled. See the diagram below for details

F4-02

Name: Torque boost cutoff frequency

Default value: 50,00 Hz

Value range: 0,00 Hz - F0-10 (max frequency)

F4-02 determines the frequency at which torque boost is disabled. See the graph below for more details.

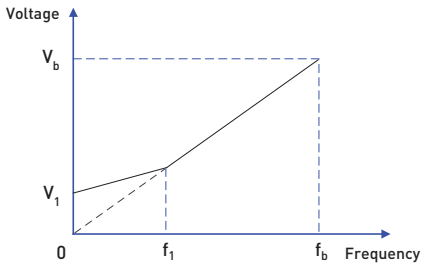

V_1 : Torque boost voltage setting	V_b : Max. output voltage
f_1 : Torque boost cutoff frequency	f_b: Rated operating frequency

Torque boost operation

F4-03

Name: U/f curve frequency point 1

Default value: 10,00 Hz

Value range: 0,00 Hz - F4-05

F4-04

Name: U/f curve voltage point 1

Default value: 25,0%

Value range: 0,0% - 100.0%

F4-05

Name: U/f curve frequency point 2

Default value: 20,00 Hz

Value range: F4-03 - F4-07

F4-06

Name: U/f curve voltage point 2

Default value: 50,0%

Value range: 0,0% ... 100,0%

F4-07

Name: U/f curve frequency point 3

Default value: 45,00 Hz

Value range: F4-05 - F2-04 (rated motor frequency)

F4-08

Name: U/f curve voltage point 3

Default value: 75,0%

Value range: 0,0% ... 100,0%

F4-03 – F4-08 are used to define custom U/f curve. A voltage value of 100% corresponds to the rated motor voltage. Make sure that the settings form a proper curve. The values should be selected based on motor and load specifications. Incorrect setting can lead to an increased motor current and subsequent motor failure.

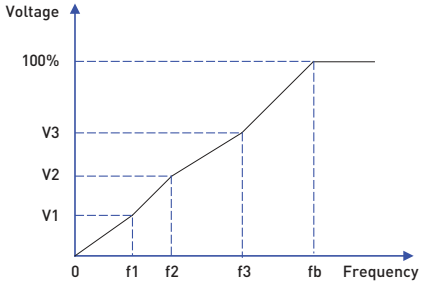

Caution! The relationship between voltages and frequencies must follow this rule: V1⩽V2⩽V3⩽V4, F1⩽F2⩽F3⩽F4. Prolonged operation at high voltage at low frequency may cause the motor to overheat. This mode is sensitive to correct overcurrent protection settings of the converter.

F4-09

Name: Slip compensation

Default value: 0,0%

Value range: 0,0% - 200,0%

This parameter is only applicable to asynchronous (induction) motors.

It can compensate for the speed slip of an induction motor as the load increases, stabilizing the motor speed depending on the load.

F4-10

Name: Over-excitation compensation

Default value: 64

Value range: 0 - 200

The higher the over-excitation compensation, the more efficient the voltage reduction.

If a frequent overvoltage error occurs, you can increase this parameter, this will lead to an increase in current.

For systems with low inertial load, set over-excitation compensation to 0. If a braking resistor is used, set over-excitation compensation to 0.

F4-11

Name: U/f oscillation suppression gain

Default value: Depends on the model

Value range: 0 - 100

When configuring the system, try to set the value of this setting to minimum, in order to eliminate its impact on the U/f scalar control loop. If the motor does not oscillate in U/f mode during operation, leave this value at 0.

When activating oscillation suppression in U/f control mode, double-check that the rated motor current and motor zero-load current are set correctly. When the vibration damping function is enabled, the motor rated current and zero-load current should be set to correct values. Otherwise, vibration suppression will be ineffective.

F4-13

Name: U/f separation voltage source

Default value: 0 (set value F4-14)

Value range:
0: Set value (F4-14)
1: AI1
2: AI2
3: AI3
4: High Speed HDI Input
5: Multi-step speed profile
6: Serial PLC
7: PID controller
8: Communication (Modbus RTU)

ATTENTION! 100% of the value corresponds to the rated motor voltage.

F4-14

Name: Digital U/f separation setting

Default value: 0 V

Value range: 0 V - F2-02 (motor rated voltage)

U/f separation control is mainly used in applications like induction heating, inverter motor power and torque control, etc.

When selecting U/f separation control mode, the output voltage can be controlled by F4-14, or by analog input, multi-step speed control, PLC, PID controller or controller reference signal, depending on the value of F4-13. When a percentage ratio (for example, a multi-step setpoint) is used as source, the value of 100% corresponds to the rated voltage of the motor; if an analog signal transmits a negative value, the setpoint will be determined by its absolute value.

F4-15

Name: U/f separation voltage change time

Default value: 0,0 s

Value range: 0,0 s - 1000,0 s

Caution: Separation voltage change time is defined as the time from 0 V to the rated motor voltage.

7.6 Group F5: Input terminals

This group of settings allows you to configure the functions of the input terminals.

F5-00

Name: MI1 terminal function

Default value: 1 (Forward rotation)

F5-01

Name: MI2 terminal function

Default value: 2 (Reverse rotation)

F5-02

Name: MI3 terminal function

Default value: 0 (No function)

F5-03

Name: MI4 terminal function

Default value: 0 (No function)

F5-04

Name: MI5 terminal function

Default value: 0 (No function)

F5-05

Name: MI6 terminal function

Default value: 0 (No function)

F5-06

Name: HDI terminal function

Default value: 0 (No function)

Table 7-1 Digital inputs settings

Value	Function	Description
0	No function	Receiving a signal has no effect on the converter
1	Forward rotation	Motor forward and reverse commands. For details, see F5-11.
2	Reverse rotation	
3	Three-wire control	Additional signal for three-wire control. For details, see F5-11.
4	Forward jog	Control signals to start the motor in jog mode in forward and reverse directions. Acceleration/deceleration frequency and time are described in settings F8-00, F8-01 and F8-02. The command is active as long as a signal is applied to one of the inputs. When the signal is removed, the converter stops
5	Reverse jog	

Value	Function	Description
6	Frequency "UP"	The function is identical to pressing the "▲" and"▼" buttons on the converter control panel.
7	Frequency "DOWN"	
8	Coasting stop	The converter removes the output voltage, the motor rotates by inertia. The function is identical to the coasting stop as described in F1-10.
9	Fault reset	The function is identical to pressing the "STOP/RESET" button on the control panel.
10	Converter pause	The converter reduces the output frequency to a stop, but all operating parameters are retained: the stage and current setpoint of the sequential PLC, wobble, and PID controller settings. After the signal is removed, operation is resumed using these settings.
11	External fault signal (normally open)	When receiving the signal, the frequency converter immediately stops running and at the same time issues an error signal Err15.
12	Multi-step signal 1	Selects one of 16 steps of a multi-step mode. Selected by a combination of these signals. See Table 7-2 for details.
13	Multi-step signal 2	
14	Multi-step signal 3	
15	Multi-step signal 4	
16	Acceleration/ Deceleration time 1	The selection of one of the four acceleration/deceleration time groups is determined by the combination of two input signals. See Table 7-3 for details.
17	Acceleration/ Deceleration time 2	
18	Primary frequency source switch	Switches the frequency reference source between frequency A (F0-03) and frequency B (F0-04).
19	Reset "UP" and "DOWN" settings (terminal and control panel)	If the frequency is set using the "▲"\"▼" buttons, or signals with the same function, the input with this setting will reset the frequency reference to the base one set in parameter F0-08.
20	Switching the run command source to the converter control panel	When a signal is given (if F0-02=1 or 2), the start-up and stop source switches to the converter control panel.
21	Acceleration/ deceleration lock	When a signal is received at a corresponding digital input, the converter maintains the existing output frequency and does not respond to frequency change commands, with the exception of the stop command.

Value	Function	Description
22	PID control pause	While the signal is being received, the PID regulation is suspended and the inverter will maintain the current output frequency. After the signal stops, the PID controller resumes operation.
23	PLC reset	After the signal is received, the running time and the current stage of the PLC are reset, after the signal stops, the PLC will restart from the zero stage.
24	Frequency wobble pause	The converter locks in the current frequency and the frequency wobble function is suspended.
25	Counter input	With this value, the digital input will be the source of pulses for the counter function.
26	Counter reset	Used in conjunction with the counter input function. Resets the current counter value to 0.
27	Length measurement	The digital input will be used for length measurement.
28	Length count reset	Used in conjunction with the length measurement input setting. Resets the current length value to 0..
29	Torque control lock	Input signal prohibits switching to torque control mode
30	Reserve	
31		
32	DC braking	When a signal is received, DC braking mode is immediately activated.
33	External fault signal (normally closed)	After the signal stops, the converter immediately stops operation and displays error Err15.
34	Frequency modification enabled	When the signal stops, running frequency bill be locked and cannot be changed.
35	PID control reverse	After the signal is received, the direction of action of the PID controller changes to the opposite of the one set in F9-03.
36	External stop 1	Converter stop signal. This signal is functionally equal to pressing the "STOP/ RESET" button.

Value	Function	Description
37	Control source selection 2	Used to switch between terminal control and control via the Modbus RTU communication protocol. When F0-02=1 or 2, if a signal is supplied to this input, the system switches to the control mode that is opposite to the one set by F0-02.
38	Disable PID Integration	After the signal is received, the integral component of the PID controller is suspended. The remaining components continue operation.
39	Switch frequency source A to preset frequency	When a signal is received, frequency source A is replaced by a frequency setpoint (F0-08)
40	Switch frequency source B to preset frequency	When a signal is received, frequency source B is replaced by a frequency setpoint (F0-08)
41	Reserve	
42		
43	PID controller profile switching	If F9-18=1, this terminal can be used to manually switch between two groups of PID controller settings. If there is no signal, the PID controller settings Kp1, Ti1, Td1 are used (F9-05 - F9-07). When the signal is received, the PID controller settings Kp2, Ti2, Td2 are used (F9-15 - F9-17).
44	Reserve	
45		
46	speed control / torque control switching	Used to implement switching between speed and torque control modes. When there is no signal at this terminal, the control mode default to the set value of FE-00. When a signal is received, it changes to the opposite mode; for more details, see the description of FE-00.
47	Emergency stop	When a signal is applied, the converter stops with the maximum possible deceleration. This function is used when the converter needs to be stopped in emergency mode.
48	External stop 2	After the signal is received, the converter stops with deceleration profile specified in F8-08.
49	Deceleration prior to DC braking	After the signal is received, the inverter decelerates to F1-11, then enters the DC rotor holding mode
50	Reset operating time	After the is received, the converter resets the total runtime value to 0; associated with parameters F8-42 and F8-53.

Table 7-2. Digital input signals and multi-step stage.

If digital inputs are used to switch multi-step mode stages (values 12-15 in settings F5-00 - F5-06 correspond to K1 - K4 values in the table below), the combination of these inputs can switch between 16 different steps.

K4	K3	K2	K1	Active step	Control setting
OFF	OFF	OFF	OFF	0th step	FD-00
OFF	OFF	OFF	ON	1st step	FD-01
OFF	OFF	ON	OFF	2nd step	FD-02
OFF	OFF	ON	ON	3rd step	FD-03
OFF	ON	OFF	OFF	4th step	FD-04
OFF	ON	OFF	ON	5th step	FD-05
OFF	ON	ON	OFF	6th step	FD-06
OFF	ON	ON	ON	7th step	FD-07
ON	OFF	OFF	OFF	8th step	FD-08
ON	OFF	OFF	ON	9th step	FD-09
ON	OFF	ON	OFF	10 step	FD-10
ON	OFF	ON	ON	11th step	FD-11
ON	ON	OFF	OFF	12th step	FD-12
ON	ON	OFF	ON	13th step	FD-13
ON	ON	ON	OFF	14th step	FD-14
ON	ON	ON	ON	15th step	FD-15

Table 7-3. Digital inputs and acceleration/deceleration time profiles.

If the digital inputs are used to switch acceleration/deceleration time profiles (values 16-17 in F5-00 - F5-06 correspond to the values of K1-K2 in the table below), the combination of these inputs can switch between 4 different acceleration/deceleration time profiles.

K1	K2	Acceleration and deceleration time profile	Related settings
OFF	OFF	Group 1	F0-17, F0-18
OFF	ON	Group 2	F8-03, F8-04
ON	OFF	Group 3	F8-05, F8-06
ON	ON	Group 4	F8-07, F8-08

F5-10

Name: Digital input filter time

Default value: 0,010 s

Value range: 0,000 s - 1,000 s

Sets the filter time for MI1 - MI7 inputs. The noise immunity of the digital inputs depends on the filter time setpoint. Increasing the filter time increases the response lag of the digital input.

F5-11

Name: Control Mode

Default value: 0 (2-wire control 1)

This parameter defines 4 different control modes for the converter via external terminals. Terminals MI_x MI_y and MI_z in the description below are terminals with parameter value equal to 1,2 and 3 respectively.

Value range:

0: Two-wire control 1

The most commonly used two-wire mode, in which the forward and reverse rotation of the motor is determined by signals at the terminals MI_x and MI_y. with settings in accordance with the table below:

Input terminal	The value of the corresponding Group F5 setting	Motor command
MI_x	1	Forward rotation
MI_y	2	Reverse rotation

MI_x	MI_y	Motor command
OFF	OFF	Stop
OFF	ON	Reverse rotation
ON	OFF	Forward rotation
ON	ON	Stop

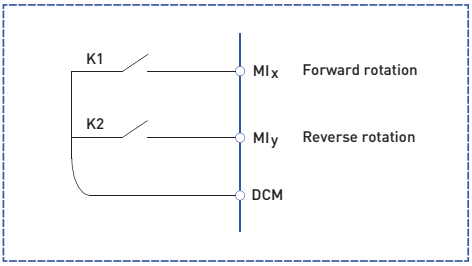

1: Two-wire control 2

In this mode, terminal MI_x enables starting and MI_y determines the direction of rotation.

Input terminal	The value of the corresponding Group F5 setting	Motor command
MI_x	1	Motor starting
MI_y	2	Rotation direction change

MI_x	MI_y	Motor command
OFF	OFF	Stop
OFF	ON	Stop
ON	OFF	Forward rotation
ON	ON	Reverse rotation

2: Three-wire control 1

In this mode, the MIz terminal (normally closed) terminal enables starting, and the direction is determined by the MIx and MIy (normally open) terminals.

Input terminal	The value of the corresponding Group F5 setting	Motor command
MI_x	1	Forward rotation
MI_y	2	Reverse rotation
MI_z	3	Start permission/ Error

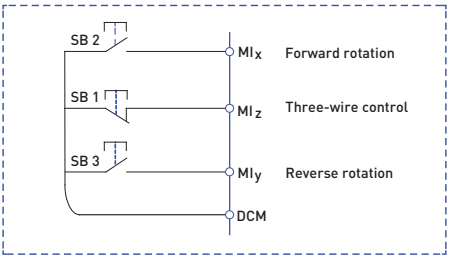

SB1: Stop button, SB2: Forward rotation button, SB3: Reverse rotation button

3: Three-wire control 2

In this mode, the MIz (normally closed) terminal has a start permission function. The start command is given by MIx (normally open) terminal and the direction is determined by the MIy terminal, same as in two-wire control 2.

Input terminal	The value of the corresponding Group F5 setting	Motor command
MI_x	1	Motor starting
MI_y	2	Change of direction
MI_z	3	Start permission/ Error

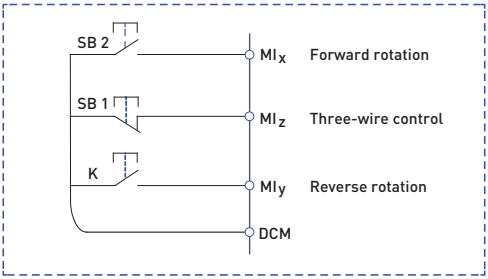

F5-12

Name: "UP"/"DOWN" frequency change rate

Default value: 1,000 Hz/s

Value range: 0,001 Hz/s - 65,535 Hz/s

The parameter is used to adjust the frequency change rate when the frequency is adjusted using the UP/DOWN terminals.

When F0-22=2, rate range: 0,001 - 65,535 Hz/s.

When F0-22=1, rate range: 0,01 - 655,35 Hz/s.

F5-13

Name: AI1 minimum voltage

Default value: 0,00 V

Value range: 0,00 - F5-15

When operating using current signal of 4 - 20 mA, the recommended value is 2V, for further adjustments of the minimum or maximum input voltages 1 V = 2 mA.

F5-14

Name: AI1 minimum voltage correspondence

Default value: 0,0%

Value range: -100.0% ... +100.0%

F5-15

Name: AI1 maximum voltage

Default value: 10,00 V

Value range: F5-13 - 10,00 V

F5-16

Name: AI1 maximum voltage correspondence

Default value: 100.0%

Value range: -100.0% ... +100.0%

When using analog signals as a control source for various control settings, you can set the correspondence between the limit values of the received analog signal (from 0 to 10 V or from 0 to 20 mA) and the limit values of the control settings in percentages from -100% to +100%, An example of the relationship is shown in the figure below:

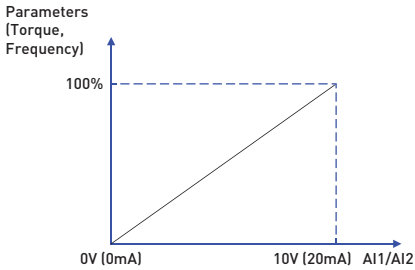

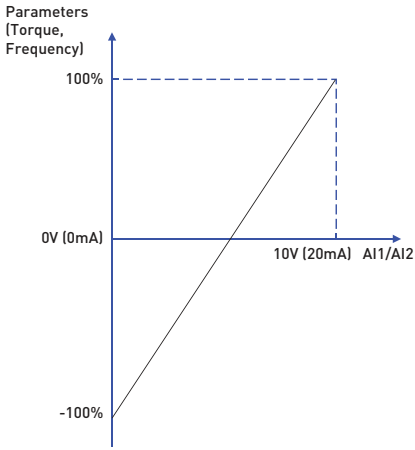

Correspondence between analog input signal and settings

F5-17

Name: AI1 filter time

Default value: 0,10 s

Value range: 0,00 s - 10,00 s

This setting is used to control AI1 filtering time. If the AI1 signal is subject to interference, increase the filter time to stabilize the received signal. Doing so degrades the responsiveness to the analog signal. Adjust this parameter depending on the converter application, interference, and settings.

Settings F5-18 - F5-22 for analog input AI2 are functionally identical to settings F5-13 - F5-17 for analog input AI1.

F5-18

Name: AI2 minimum voltage

Default value: 0,00 V

Value range: 0,00 V - F5-20

F5-19

Name: AI2 minimum voltage correspondence

Default value: 0,0 %

Value range: -100.0% ... +100.0%

F5-20

Name: AI2 maximum voltage

Default value: 10,00 V

Value range: F5-18 - 10.00 V

F5-21

Name: AI2 maximum voltage correspondence

Default value: 100.0%

Value range: -100.0% ... +100.0%

F5-22

Name: AI2 filter time

Default value: 0,10 s

Value range: 0,00 s - 10,00 s

Settings F5-23 - F5-27 for analog input AI3 are functionally identical to settings F5-13 - F5-17 for analog input AI1.

F5-23

Name: AI3 minimum voltage

Default value: 0,00 V

Value range: 0,00 V - F5-25

F5-24

Name: AI3 minimum voltage correspondence

Default value: 0,0 %

Value range: -100.0% ... +100.0%

F5-25

Name: AI3 maximum voltage

Default value: 10,00 V

Possible values: F5-23 - 10,00 V

F5-26

Name: AI3 maximum voltage correspondence

Default value: 100.0%

Value range: -100.0% ... +100.0%

F5-27

Name: AI3 filter time

Default value: 0,10 s

Value range: 0,00 s - 10,00 s

See settings for AI1, AI2, and AI3 inputs.

F5-50

Name: Minimum frequency at HDI pulse input

Default value: 0,00 kHz

Value range: 0,00 KHz - F5-52

F5-51

Name: HDI minimum frequency correspondence

Default value: 0,0 %

Value range: -100.0% ... +100.0%

F5-52

Name: Maximum frequency at HDI pulse input

Default value: 50,00 kHz

Value range: F5-50 - 100,00 kHz

F5-53

Name: HDI maximum frequency correspondence

Default value: 100.0%

Value range: -100.0% ... +100.0%

When using a high speed input as a control source for various control settings, you can set the correspondence between the limit frequency of the received pulse signal (from 0 to 100 kHz) and the limit values of the control settings in percentages from -100% to +100%, An example of the relationship is shown in the figure below:

Correspondence between the HDI pulse frequency and settings

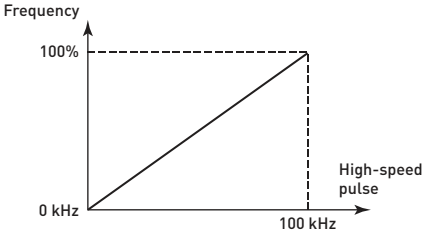

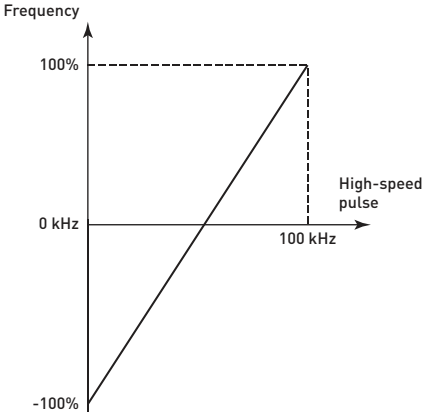

F5-54

Name: HDI filter time

Default value: 0,10 s

Value range: 0,00 s - 10,00 s

F5-57

Name: MI1 delay time

Default value: 0,0 s

Value range: 0,0 s - 3600,0 s

F5-58

Name: MI2 delay time

Default value: 0,0 s

Value range: 0,0 s - 3600,0 s

F5-59

Name: MI3 delay time

Default value: 0,0 s

Value range: 0,0 s - 3600,0 s

Sets response time delay for inputs MI1, MI2 and MI3.

※ Currently only MI1, MI2 and MI3 have delay time function.

F5-60

Name: MI digital input logic - section 1

Default value: 00000

Value range:

- Units digit: MI1
- Tens digit: MI2
- Hundreds digit: MI3
- Thousands digit: MI4
- Tens of thousands digit: MI5

0: Direct logic

When MI and DCM are closed, the terminal will be considered to have received a signal (transition from logical 0 to 1), and when open, the signal will be considered removed (transition from logical 1 to 0).

1: Reverse logic

When MI and DCM open, the terminal will be considered to have received a signal (transition from logic 0 to 1), and when closed, the signal will be considered removed (transition from logic 1 to 0).

F5-61

Name: MI digital input logic - section 2

Default value: 00

Value range:

> Units digit: MI6

> Tens digit: HDI

0: Direct logic

When MI and DCM are closed, the terminal will be considered to have received a signal (transition from logical 0 to 1), and when open, the signal will be considered removed (transition from logical 1 to 0).

1: Reverse logic

When MI and DCM open, the terminal will be considered to have received a signal (transition from logic 0 to 1), and when closed, the signal will be considered removed (transition from logic 1 to 0).

7.7 Group F6: Output terminals

In this section, you can familiarize yourself with the function of the converter output terminals.

F6-00

Name: HDO output function

Default value: 1 (open collector output)

Value range:

0: high speed pulse output

1: open collector output

HDO can output two types of signals, high speed pulse signal or open collector output. The maximum output frequency in high-speed pulse output mode is 100 kHz, see setting F6-09 for details. There is only one parameter transmitted through the high-speed pulse input - the current running frequency at the output of the converter. The maximum value of the pulse output corresponds to the upper limit of the converter output frequency.

F6-01

Name: HDO output function (in open collector output mode)

Default value: 0 (No function)

F6-02

Name: Output relay function (TA1, TB1, TC1)

Default value: 2 (Converter error)

F6-04

Name: DO Open Collector Output Function Selection

Default value: 0 (No function)

F6-05

Name: Output relay function (TA2, TB2, TC2)

Default value: 0 (No function)

Table 7-4 Value range of parameters F6-01... F6-05

Value	Function	Description
0	No function	The output terminal does not output a signal
1	Converter running	The output transmits a signal when the converter is running, and stops transmitting when the converter stops.
2	Converter error	The output transmits a signal when there is an error with the converter.
3	Frequency setpoint FDT1 reached	See description of F8-19 and F8-10.
4	Frequency lag setpoint reached	See description of F8-21.
5	Zero frequency operation	The output transmits a signal when a start command is given, but the actual frequency is zero. Signal is not transmitted when stopping
6	Motor overload warning	The output transmits a signal warning of motor overload. Trigger conditions are configured in settings FA-00 through FA-02.
7	Converter overload warning	The converter overload warning is given 10 seconds before the overload protection system is triggered.
8	Maximum counter setpoint reached	The output transmits a signal when the maximum counter value, set in FB-08, is reached.
9	Counter setpoint reached	The output transmits a signal when the counter setpoint value, set in FB-09, is reached.
10	Length setpoint reached	The output transmits a signal when the length setpoint value, set in FB-05 is reached.
11	PLC cycle completed	When the sequential PLC cycle completes, the output transmits a 250 ms signal.
12	Total operating time reached	When the total operating time reaches the value set in F8-17, the output transmits a signal. Total operating time persists between stops.
13	Frequency limit reached	When the output frequency exceeds F0-12 (Upper frequency limit) or falls below F0-14 (Lower frequency limit), the output transmits a signal.
14	Torque limit reached	The output transmits a signal in speed control mode, when the output torque exceeds the torque limit. This turns on the overtorque protection.
15	Converter ready	The output transmits a signal when internal algorithms have checked the condition of the control and power boards, and the converter has no errors to report.
16	AI1>AI2	The output transmits a signal if the signal AI1 is greater than AI2
17	Upper frequency limit reached	The output transmits a signal when the output frequency reaches F0-12 (Upper frequency limit).

Value	Function	Description
18	Lower frequency limit reached	The output transmits a signal when the output frequency reaches F0-14 (Lower frequency limit). No signal is transmitted when the converter is stopped.
19	Undervoltage warning	The output transmits a signal when the voltage drops.
20	Establishing communication	See communication protocol description.
21	Reserve	
22		
23	Zero-frequency operation 2	The output transmits a signal when the converter output frequency is 0 Hz. The signal does not stop transmitting when teh converter is stopped.
24	Total time online reached setpoint	The output transmits a signal when the total time online after power on reaches F8-16. Total time online persists between stops.
25	Frequency setpoint FDT2 reached	See description of F8-28 and F8-29.
26	Frequency setpoint 1 reached	See description of F8-30 and F8-31.
27	Frequency setpoint 2 reached	See description of F8-32 and F8-33.
28	Current setpoint 1 reached	See description of F8-38 and F8-39.
29	Current setpoint 2 reached	See description of F8-40 and F8-41.
30	Timer triggered	The output transmits a signal when the timer function is active (F8-42=1), after the operating time reaches the timer setpoint.
31	AI1 signal limit exceeded	The output transmits a signal when the analog output signal AI1 falls outside the limits set in F8-46 and F8-45.
32	Zero-load operation	The output transmits a signal when the inverter is in zero-load operating mode. Trigger conditions are set by FA-64 and FA-65.
33	Reverse rotation	The output transmits a signal when a reverse command is given.
34	Zero current	See description of F8-34 and F8-35.
35	IGBT module temperature setpoint reached	The output transmits a signal when the signal from the internal temperature sensor of the IGBT module exceeds the value of F8-47
36	Output current limit exceeded	See description of F8-36 and F8-37.
37	Lower frequency limit reached (continues to output after stopping)	The output transmits a signal when the output frequency reaches F0-14 (Lower frequency limit). The signal does not stop after the converter stops.
38	Warning signal	The output transmits a signal when an error occurs and the converter determines that the source of the error cause has not been resolved. The output continues to transmit a signal until the error is cleared.
39	Reserved	
40	Total running time reached	The output transmits a signal when the current running time reaches the value of F8-53. Current running time is reset after stopping.

F6-07

Name: AO1 output function

Default value: 0

F6-08

Name: AO2 output function

Default value: 1 (Set frequency)

Output range of AO1 and AO2: 0-10 V / 4 - 20 mA

Table 7-5 Value range of F6-07 ... F6-08 :

Value	Function	Range
0	Running frequency	0 - Max.output frequency
1	Frequency setpoint	0 - Max.output frequency
2	Output current	0 - 200% of motor rated current
3	Output torque	0 - 200% of rated motor torque
4	Output power	0 - 200% of rated power

Value	Function	Range
5	Output voltage	0 - 120% rated voltage of the converter
6	Reserve	
7	AI1	0V - 10 Vor4-20 mA
8	AI2	0V - 10 Vor4-20 mA
9	AI3	0V - 10 Vor4-20 mA
10	Wound material length	0 - Max. length setpoint
11	Counter value	0 - Max. counter setpoint
12	Frequency set via communication protocol	0,0% - 100.0%
13	Motor rotation speed	0 - speed corresponding to max. frequency
14	Output current (100.0% corresponds to 1000,0 A)	0,0A - 1000,0 A
15	Output voltage (100,0% corresponds to 1000,0 V)	0,0 V -1000,0 V
16	Reserve	

F6-09

Name: HDO output upper limit

Default value: 50 kHz

Value range: 0,01 kHz - 100,00 kHz

F6-10

Name: AO1 offset ratio

Default value: 0,0%

Value range: -100.0% ... +100.0%

F6-11

Name: AO1 gain

Default value: 1,00

Value range: -10.00 ... +10.00

F6-12

Name: AO2 offset ratio

Default value: 0,0 %

Value range: -100.0% ... +100.0%

F6-13

Name: AO2 Gain

Default value: 1,00

Value range: -10,00 ... +10,00

Settings F6-10... F6-13 are designed to correct the analog output zero and value amplitude deviation. They can also be used to customize the AO1/AO2 output curve.

If the offset is considered to be "b", the gain is "k", the actual value of the signal is "Y", and the value of the associated parameter is "X", then the actual value of the signal is calculated as: Y=kX+b;

In this even, a bias ratio, equal to 100% for AO1 and AO2 corresponds to a +10 V (or 20 mA) signal.

The associated value of the parameter defined in Table 7-5 is determined from 0 to the maximum value at the analog output: 0 - 10 V (or 4 - 20 mA).

For example, when the analog output function is set to transmit the running frequency (F6-07 = 0), and the output signal is required to be 8V at 0Hz of running frequency, and 3 V at the maximum output frequency, then the gain value in F6-11 should be is set to "-0,50", and the offset in F6-10 should be set to "80%".

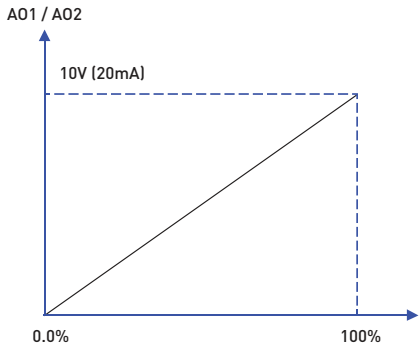

F6-17

Name: HDO output delay time

Default value: 0,0 s

Value range: 0,0 s - 3600,0 s

F6-18

Name: Relay 1 output delay time

Default value: 0,0 s

Value range: 0,0 s - 3600,0 s

F6-20

Name: DO output delay time

Default value: 0,0 s

Value range: 0,0 s - 3600,0 s

F6-21

Name: Relay 2 output delay time

Default value: 0,0 s

Value range: 0,0 s - 3600,0 s

Parameters F6-17 - F6-21 determine the response time delay of HDO and DO digital output terminals, relay 1 and relay 2 outputs.

F6-22

Name: DO output terminals logic

Default value: 00000 (Direct logic for all signals)

- Units digit: HDO output
- Tens digit: relay 1
- Hundreds digit: reserved
- Thousands digit: DO output
- Tens of thousands digit: relay 2

Output logic of relay 1, relay 2, HDO, and DO.

0: Direct logic: closing of the corresponding output terminal with the DCM is considered a signal (transition from logical 0 to 1), opening of the contact is cessation of signal (transition from logical 1 to 0).

1: Direct logic: opening of the corresponding output terminal with the DCM is considered a signal (transition from logical 0 to 1), closing of the contact is cessation of signal (transition from logical 1 to 0).

7.8 Group F7: Display and control panel

F7-00

Name: User password

Default value: 0

Value range: 0 - 65535

Setting a password:

The user password can be set to a non-zero number by entering the password in F7-00 and pressing the ENTER key to confirm the password. The password protection will take effect 2 minutes after the operator last interacts with the control panel or after the power is turned off. Once the password has been set and is in effect, you need to enter the correct password to enter the system menu. If the password is entered incorrectly, you cannot view or change settings.

Changing the password:
Enter the correct password, set in F7-00, after entering it correctly (F7-00 displays its value), enter a new password repeating the steps in the paragraph above.

Removing the password:
Enter the correct password, set in F7-00, after entering it correctly (F7-00 displays its value), enter a 0 as the new password and press "ENTER". The password is removed and the password protection is disabled.

F7-01

Name: Function of the BACK/FUNC button

Default value: 0 (Reverse rotation)

Value range:

0: Reverse rotation

1: Control source selection: control panel / remote

2: Switching between forward and reverse rotation

3: Jog forward

4: Jog reverse

F7-02

Name: Function of the STOP/RESET button

Default value: 1 (Always works)

Value range:

0: Works only in control panel mode (F0-02=0)

1: Works in any control mode (F0-02=0, 1 or 2)

F7-03

Name: Control panel running status display - Block 1

Default value: 401F

Value range: 0000 - FFFF

F7-04

Name: Control panel running status display - Block 2

Default value: 0000

Value range: 0000 - FFFF

To display the value of parameters in running mode, the corresponding bits must be set to 1, after which, every 4 bits must be converted into a hexadecimal number according to the diagram below and the resulting value of 4 numbers must be entered into F7-04 (same for F7-03)

F7-03 and F7-04 status display bits:

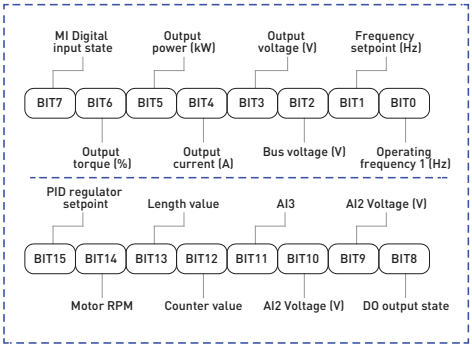

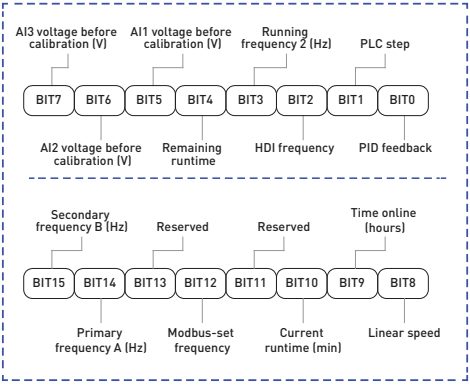

For example, if the user needs to see the running frequency 1 (Hz), frequency setpoint (Hz), DC bus voltage (V), output voltage (V), output current (A), output power (kW), DO function, AI1 voltage (V), AI2 voltage (V), the value of each bit should be set to 1 according to the table below:

BIT7	BIT6	BIT5	BIT4	BIT3	BIT2	BIT1	BIT0
0	0	1	1	1	1	1	1
3				F			
BIT15	BIT14	BIT13	BIT12	BIT11	BIT10	BIT9	BIT8
0	0	0	0	0	1	1	1
0				7			

Total value for parameter F7-03 = 073F

F7-05

Name: Status display in standby mode

Default value: 0003

Value range: 0000 - FFFF

This parameter determines which values will be displayed when the converter is in standby mode.

The method for setting the value of F7-03, F7-04 and F7-05 is identical.

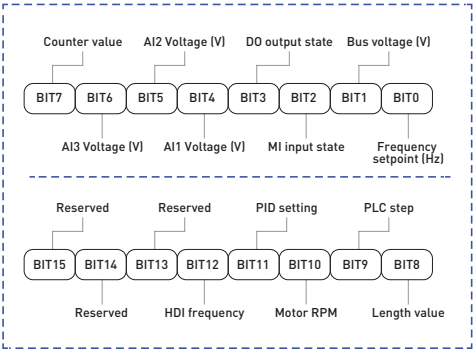

F7-06

Name: Frequency/Load speed display coefficient

Default value: 3,0000

Value range: 0,0001 ~ 6,5000

This coefficient converts the value of the output frequency into Motor speed. The RPM value is derived, not sensed, since VECTOR 100 does not use signals from the tachometer or encoder, if available, for its operation. To correctly display the current RPM, you can use the rated motor speed and divide it by the rated frequency multiplied by 10. E.g., with rated rotation speed of 2850 rpm and a rated motor frequency of 50 Hz, the value should be set to 2850/500 = 5,7.

F7-07

Name: IGBT module temperature

Default value: -

Value range: 0,0 °C ~ 100,0 °C

Displays IGBT module temperature.

F7-08

Name: Secondary (lower) display status info

Default value: 04 (Output current, A)

Value range:

00: Running frequency 1 (Hz)
01: Frequency setpoint (Hz)
02: Bus voltage (V)
03: Output voltage (V)
04: Output current (A)
05: Output power (kW)
06: Output torque (%)
07: MI digital input mode
08: DO operating mode
09: AI1 voltage (V)
10: AI2 voltage (V)
11: AI3 voltage (V)
12: HDI input pulse frequency
13: Heatsink temperature
14: Counter value
15: Length value
16: RPM
17: PID controller setting
18: PID controller feedback
19: PLC program step
20: Frequency set via MODBUS protocol
21: Primary frequency A (Hz)
22: Secondary frequency B (Hz)
23: Total runtime (hours)
24: Current runtime (min)
25: Total runtime
26: Remaining runtime

F7-09

Name: Total runtime

Default value: -

Value range: 0 h - 65535 h

Displays the total runtime of the converter. Additionally, when the runtime time reaches the value specified in F8-17, the digital output terminal (when the value in the corresponding function parameter is set to 12) outputs a signal.

F7-10

Name: Serial number

Default value: -

Value range: Serial number of the converter

F7-11

Name: Software version

Default value: -

Value range: Converter software version

F7-12

Name: Load speed display decimal place

Default value: 1 (1 decimal place)

Value range:

0: 0 decimal places

1: 1 decimal place

2: 2 decimal places

3: 3 decimal places

This parameter is intended to set the number of decimal places in the calculated value of the motor rotational speed. Below is a sample calculation:

When F7-06=2,000, F7-12=2, running frequency=40,00Hz, then load speed: 40,00x2,000=80,00 (2 decimal places)

F7-13

Name: Total time online

Default value: -

Value range: 0 h - 65535 h

Displays the accumulated time since input power has been applied to the inverter after it has been manufactured.

When the total time online reaches the value set in F8-16, the multi-function digital terminal outputs a signal if the corresponding parameter is set to 24.

F7-14

Name: Total power consumed

Default value: -

Value range: 0 kW - 65535 kW

Displays total energy consumption of the converter.

F7-15

Name: Editing

Default value: 0 (Allowed)

Value range:

0: Allowed

1: Not allowed

This parameter is intended to protect converter settings from incorrect configuration.

If F7-15=0, the settings can be edited. If F7-15=1, all settings are view-only.

7.9 Group F8: Additional functions

F8-00

Name: Jog frequency

Default value: 2,00 Hz

Value range: 0,00 Hz - F0-10 (max frequency)

F8-01

Name: Jog acceleration time

Default value: 20,00 s

Value range: 0,0s - 6500,0 s

F8-02

Name: Jog deceleration time

Default value: 20,00 s

Value range: 0,1s - 6500,0 s

Settings F8-00 - F8-02 govern the running frequency and acceleration/deceleration time in jog mode.

In jog mode, converter is in direct starting mode (F1-00=0), and stop command decelerates to stop. (F1-10=0).

F8-03

Name: Acceleration time 2

Default value: Depends on the model

Value range: 0,0 s - 6500,0 s

F8-04

Name: Deceleration time 2

Default value: Depends on model

Value range: 0,0s - 6500,0 s

F8-05

Name: Acceleration time 3

Default value: Depends on the model

Value range: 0,0 s - 6500,0 s

F8-06

Name: Deceleration time 3

Default value: Depends on model

Value range: 0,0s - 6500,0 s

F8-07

Name: Acceleration time 4

Default value: Depends on the model

Value range: 0,0 s - 6500,0 s

F8-08

Name: Deceleration time 4

Default value: Depends on model

Value range: 0,0s - 6500,0 s

The converter supports 4 groups of acceleration/deceleration time profiles. The principle of their operation is the same. For detailed description, see the description for the first group in F0-17 and F0-18.

The user can select one of the acceleration/deceleration time profiles using a combination of signals from MI digital inputs. For details, please refer to the description of F5-00 - F5-04.

F8-09

Name: Jump frequency 1

Default value: 0,00 Hz

Value range: 0,00 Hz - F0-10 (max frequency)

F8-10

Name: Jump frequency 2

Default value: 0,000 Hz

Value range: 0,00 Hz - F0-10 (max frequency)

F8-11

Name: Jump frequency amplitude

Default value: 0,010 Hz

Value range: 0,00 Hz - F0-10 (max frequency)

The converter provides load mechanical resonance protection via jump frequencies set in F8-09 and F8-10, which represent the center of the resonance-prone frequency band, and F8-11 representing the width of the band, see the graph below for more info. If the value of F8-09 and F8-10 is 0, the jump frequency function is not used.

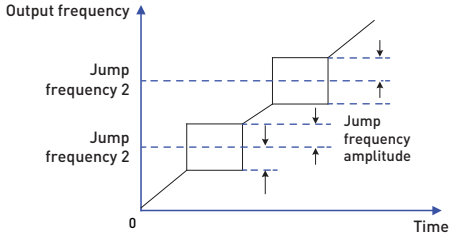

F8-12

Name: Zero-current FWD/REV pause

Default value: 0,0 s

Value range: 0,0s - 3000,0 s

Designed to specify a pause with an output frequency of 0 Hz when changing the direction of the motor rotation.

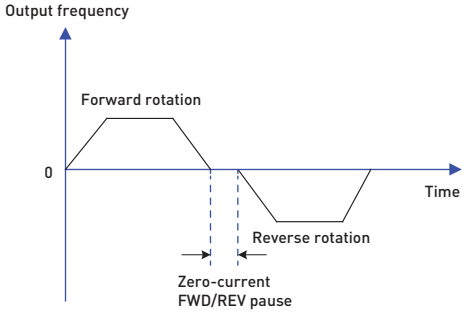

F8-13

Name: Reverse

Default value: 0 (Allowed)

Value range:

0: Allowed

1: Not allowed

Set F8-13 to 1 if the design of the machine does not allow reverse rotation of the motor.

F8-14

Name: Frequency under minimum action

Default value: 0 (Run at lower frequency limit F0-14)

Value range:

0: Run at lower frequency limit F0-14

1: Stop

2: Run at zero frequency

F8-15

Name: Droop control

Default value: 0,00 Hz

Value range: 0,00 Hz - 10,00 Hz

If multiple motors are connected to the same load, load distribution may be unbalanced due to the difference in motor speed ratings. This load balancing function allows you to balance the load by reducing the motor speed as the load increases. You can configure this setting directly when setting up the equipment.

F8-16

Name: Total time online reached setpoint

Default value: 0 h

Value range: 0 h - 65000 h

When the total time online reaches the value set in F7-13, the multi-function digital output terminal, configured with the setting of 24, outputs a signal.

F8-17

Name: Total runtime reached setpoint

Default value: 0 h

Value range: 0 h - 65000 h

When the Total runtime (F7-09) reaches the value set in F8-17, the multi-function digital output, configured with the setting of 12, outputs a signal.

F8-18

Name: Auto-restart after power failure

Default value: 1 (Auto-restart)

Value range:

This setting determines whether the converter will auto-restart after power is turned on following an emergency shutdown. Active in terminal control mode (F0-02=1).

0: Auto-restart If P8-18=0 and a start signal is sent to the corresponding digital input, the converter will automatically start after power is applied.

1: No auto-restart. If P8-18=1 and a start signal is sent to the corresponding digital input, the inverter will not restart automatically after power is applied. In order to restart the converter, the signal must be stopped and sent again. In this event, the converter and the motor will not start immediately after power on, which reduces the likelihood of repeat emergency situations.

F8-19

Name: Frequency setpoint (FDT1)

Default value: 50,00 Hz

Value range: 0,00 Hz - F0-10 (max frequency)

F8-20

Name: Frequency lag setpoint (FDT1)

Default value: 5,0%

Value range: 0,0% - 100,0% (F8-19)

If the running frequency reaches a setpoint (FDT1), the digital output, configured as 3, will output a signal as long as the running frequency value is greater than the value of F8-19, taking into account its lag.

※ The value of F8-20 is a percentage value of F8-19.

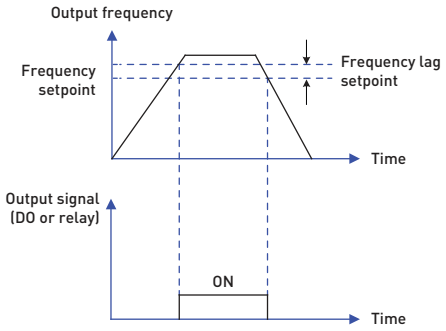

F8-21

Name: Frequency setpoint amplitude (FDT1)

Default value: 0,0%

Value range: 0,0% - 100,0% (max frequency)

When the running frequency is within the range of the frequency setpoint, a a digital output, configured as 4, outputs a signal.

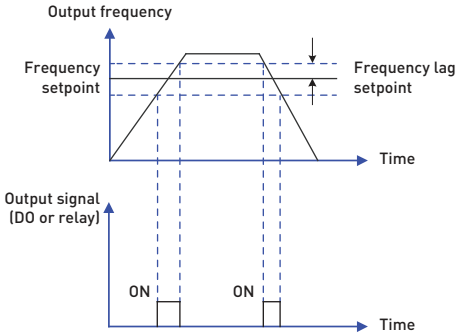

F8-22

Name: Jump frequency action during acceleration/ deceleration

Default value: 1 (Yes)

Value range:

0: No

1: Yes

This setting determines the system behavior once the running frequency reaches jump frequency range (see settings F8-09 - F8-11).

If F8-22=1 and the running frequency during acceleration/ deceleration falls into the jump frequency range, the running frequency will be increased (jump) to the upper limit of this range.

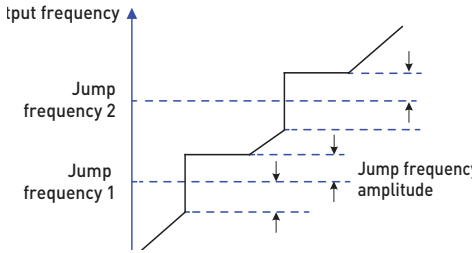

F8-25

Name: Acceleration frequency switching setpoint

Default value: 0,00 Hz

Value range: 0,00 Hz - F0-10 (max frequency)

F8-26

Name: Deceleration frequency switching setpoint

Default value: 0,00 Hz

Value range: 0,00 Hz - F0-10 (max frequency)

This setting is active when switching between acceleration and deceleration times. It allows you to switch the acceleration and deceleration time between groups 1 and 2 automatically, depending on the frequency, and not on an external digital signal input.

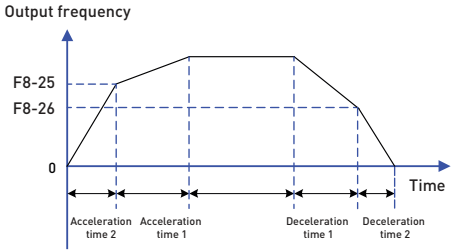

When accelerating, if frequency is lower than F8-25, then acceleration time group 2 is selected; if greater, then acceleration time group 1 is selected.

When decelerating, if the frequency is greater than F8-26, deceleration time group 1 is selected; if less, then deceleration time group 2 is selected.

F8-27

Name: Jog mode digital inputs priority

Default value: 0 (No)

Value range:

0: No

1: Yes

This setting determines whether the jog mode command from digital inputs has the highest priority.

If F8-27=1, as soon as digital inputs transit the appropriate command, the converter will switch to jog mode. This setting can be used to enable manual jog mode when operating the machine.

F8-28

Name: Frequency setpoint (FDT2)

Default value: 50,00 Hz

Value range: 0,00 Hz - F0-10 (max frequency)

F8-29

Name: Frequency lag setpoint (FDT2)

Default value: 5,0%

Value range: 0,0% - 100,0% (F8-28)

This setting's configuration and functions are the same as for FDT1, except for the digital output which will be used to output the signal. For FDT2, the value of any setting from the F6-01 - F6-05 range should be set to 25. For details, see the description of FDT1 (F8-19, F8-20).

F8-30

Name: Frequency setpoint 1

Default value: 50,00 Hz

Value range: 0,00 Hz - F0-10 (max frequency)

F8-31

Name: Frequency setpoint 1 amplitude

Default value: 0,0%

Value range: 0,0% - 100,0% (max frequency)

F8-32

Name: Frequency setpoint 2

Default value: 50,00 Hz

Value range: 0,00 Hz - F0-10 (max frequency)

F8-33

Name: Frequency setpoint 2 amplitude

Default value: 0,0 %

Value range: 0,0% - 100,0% (max frequency)

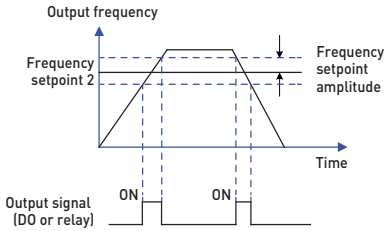

This function is similar to the same function for FDT1, except that there is no frequency lag setpoint, and the different digital output. For FDT2, the value of any of the settings in the F6-01 - F6-05 should be set to 26 for frequency setpoint 1, and to 27 for frequency setpoint 2. For details, see the description of FDT1 (F8-19, F8-20).

F8-34

Name: Zero current detection level

Default value: 5,0%

Value range:

0,0% - 300,0%

※ 100.0% corresponds to the rated motor current.

F8-35

Name: Zero current detection delay

Default value: 0,10 s

Value range: 0,01 s - 600,00 s

If the output current is less than or equal to the zero current detection level, after the delay time has elapsed , the digital output configured as 34 outputs a signal.

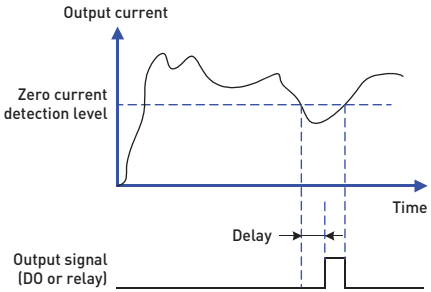

F8-36

Name: Output current overshoot value

Default value: 180,0%

Value range:

0,0% (no detection)

0,1% - 300,0% (motor rated current)

F8-37

Name: Output overcurrent delay

Default value: 0,10 s

Value range: 0,00 s - 600,00 s

If the output current is greater than the output current detection level, after the delay time has elapsed , the digital output configured as 36 outputs a signal.

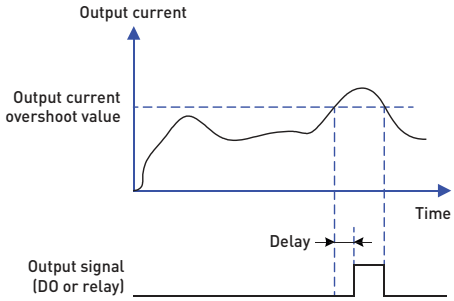

F8-38

Name: Current setpoint 1

Default value: 100.0%

Value range: 0,0% - 300% (motor rated current)

F8-39

Name: Current setpoint 1 amplitude

Default value: 0,0 %

Value range: 0,0% - 300% (motor rated current)

F8-40

Name: Current setpoint 2

Default value: 100,0%

Value range: 0,0% - 300% (motor rated current)

F8-41

Name: Current setpoint 2 amplitude

Default value: 0,0 %

Value range: 0,0% - 300% (motor rated current)

If the output current is within the amplitude range of the current setpoint (F8-38 and F8-40), the digital configured as 28 for current setpoint 1 or 29 for current setpoint 2 outputs a signal.

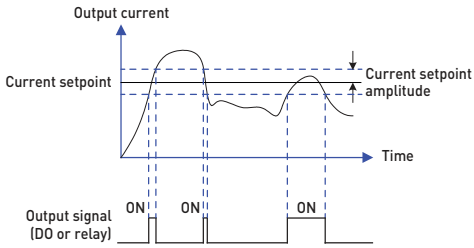

F8-42

Name: Timer function

Default value: 0 (No)

Value range:

0: No

1: Yes

F8-43

Name: Timer source

Default value: 0 (Timer setpoint F8-44)

Value range:

0: Timer setpoint F8-44

1: AI1

2: AI2

3: AI3

※ Analog input range corresponds to F8-44

F8-44

Name: Timer setpoint

Default value: 0,00 min

Value range: 0,0min - 6500,0 min

Setting F8-42 - F8-44 are used to set up a timer.

When F8-42 timer function is used, timer starts after the converter starts. When the timer setpoint is reached, the converter stops and the digital output configured as 30 outputs a signal.

After the converter is restarted, the timer stars from zero and the remaining running time can be monitored in U0-20.

Timer is set by F8-43 and F8-44. The default unit of time is a minute.

F8-45

Name: AI1 lower signal limit

Default value: 3,10 V

Value range: 0,00 V - F8-46

F8-46

Name: AI1 upper signal limit

Default value: 6,80 V

Value range: F8-45 - 10,00 V

When the value of analog input AI1 is greater than F8-46, or less than F8-45, the digital output configured as 31 outputs a signal, used to monitor whether the AI1 signal is within the specified range.

F8-47

Name: IGBT module temperature warning

Default value: 75 °C

Value range: 0°C - 100°C

If the converter heatsink temperature reaches 75°C, the digital output configured as 35 outputs a signal.

F8-48

Name: Cooling fan control

Default value: 0 (Fan autostart when the converter is turned on)

Value range:

0. Fan autostart when the converter is turned on

1. Fan autostart when the motor is turned on

F8-49

Name: Wake up frequency

Default value: 0,00 Hz

Value range:

F8-51 (Standby frequency) - F0-10 (Max. frequency)

F8-50

Name: Wake up frequency delay

Default value: 0,0 s

Value range: 0,0s - 6500,0 s

F8-51

Name: Standby frequency

Default value: 0,00 Hz

Value range: 0,00 Hz - F8-49 (Wake up Frequency)

F8-52

Name: Standby frequency delay

Default value: 0,0 s

Value range: 0,0s - 6500,0 s

These settings are used to implement the stanby and wake up functions (Standby mode).

During operation, when the frequency is less than the standby frequency F8-51, after the sleep frequency delay F8-52, the converter enters a standby state, automatically stops the motor, but continues to monitor the frequency.

When the converter is in standby mode and there is no external stop command, once the frequency exceeds the wake up frequency F8-49, the converter starts the motor after the wake up frequency delay time F8-50.

As a rule, the wake up frequency should be greater than or equal to the standby frequency. If the standby and wake up frequency are set to 0 Hz, the Standby mode is deactivated.

When the Standby mode is active, if the frequency setpoint is determined by the PID controller, F9-28 must be set to 1 for correct operation, so that the PID controller operation does not stop after the motor stops.

F8-53

Name: Motor runtime setpoint

Default value: 0,0 min

Value range: 0,0 min - 6500,0 min

When the motor runtime time reaches the value of F8-53, the digital output configured as 40 outputs a signal.

7.10 F9: PID control

PID control is a standard way to control various processes, such as flow, pressure and temperature control in systems that depend on motor speed, such as a pumps or fans. The operating principle is to determine the difference between the setpoint and the feedback value. The integrated PID controller governs the output frequency of the inverter depending on the proportional, integral and derivative components.

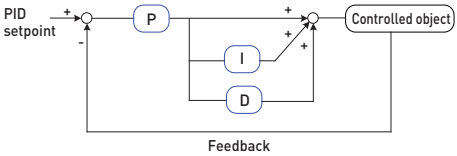

F9-00

Name: PID control source

Default value: 0 (F9-01 setpoint)

Value range:

0: F9-01 setpoint

1: AI1

2: AI2

3: AI3

4: HDI input

5: ModBus RTU

6: Multi-step speed profile

F9-01

Name: PID control setpoint

Default value: 50,0%

Value range:

0,0% - 100%

F9-00 setting is used to select the PID controller reference setpoint source. The PID controller is activated when selected as a control source in appropriate settings, e.g. F0-03 (F0-04)=8 for frequency source.

ATTENTION!

➢ The PID controller setpoint and feedback values are calculated as percentages.

➢ The ratios of the PID controller setpoint and feedback are identical: 100% of the setpoint equals 100% of the feedback.

➢ The PID reference setpoint source and the feedback setpoint source cannot be the same.

F9-02

Name: PID feedback source

Default value: 0 (AI1)

Value range:

0: AI1

1: AI2

2: AI3

3: AI1-AI2

4: HDI input

5: Modbus RTU protocol

6: AI1+AI2

7: Max. (|AI1|, |AI2|)

8: Min. (|AI1|, |AI2|)

This setting specifies PID controller feedback source.

F9-03

Name: PID control action

Default value: 0 (Positive)

Value range:

0: Positive

When the feedback value is less than the PID reference value, the output frequency of the converter is increased to achieve parity between reference and feedback.

When the feedback value is greater than the PID reference value, the output frequency of the converter is decreased to achieve parity.

E.g., pressure control in a closed loop system.

1: Negative.

When the feedback signal value is less than the PID reference value, the converter output frequency is reduced to achieve parity reference and feedback.

When the feedback signal value is greater than the PID reference value, the output frequency of the inverter is increased to achieve parity.

E.g., Air conditioning system.

F9-04

Name: PID settings display range

Default value: 1000

Value range: 0 - 65535

This setting is a dimensionless unit. Used to display PID settings and parameters, like reference setpoint (U0-15) and feedback value (U0-16) of the PID controller not as ratios, but as equivalent of physical values.

E.g., if F9-04 is set to 2000 and the PID reference setpoint is 100%, the PID settings display (U0-15) will show 2000.

F9-05

Name: Proportional gain Kp1

Default value: 20,0

Value range: 0,0 - 100,0

Determines the intensity of the PID control action. A value of 100,0 means thatwhen the deviation between feedbackand reference is 100.0%, the converter will correct at the maximum frequency.

F9-06

Name: Integration time Ti1

Default value: 2,00 s

Value range: 0,01 s - 10,00 s

Determines the intensity of integral component control. The integral component is designed to remove the residual mismatch between the system feedback values and the controller reference setting.

F9-07

Name: Differentiation time Td1

Default value: 0,000 s

Value range: 0,000 s - 10,000 s

Determines the intensity of differential component control. The differential component eliminates damped oscillations and optimizes response. Disabled by default, recommended value 0,2 * Ti1 (F9-06)

F9-08

Name: PID controller reverse frequency cutoff

Default value: 0,00 Hz

Value range: 0,00 Hz - F0-10 (max. frequency)

In some events, the motor may need to be rotated in reverse to arrive at the PID reference setpoint. Not all designs allow for reverse. This value either disables reverse rotation (default value) or limits it (the value of this setting determines the absolute value of the lower frequency limit for PID control).

F9-09

Name: PID deviation limit

Default value: 0,0 %

Value range: 0,0% ... 100,0%

The PID controller will start operating if the difference between the reference setpoint and the feedback value is greater than this setting. If the difference between the reference and feedback is less than the value of this setting, the PID controller will not regulate the output frequency will remain unchanged. This setting makes PID control more stable.

F9-10

Name: PID differential amplitude

Default value: 0,10%

Value range: 0,00% - 100,00%

Sets the maximum control amplitude for the differential component.

F9-11

Name: PID setpoint filter time

Default value: 0,00 s

Value range: 0,00 - 650,00 s

This setting is used to control the rate of change for the PID reference setpoint from 0,0% to 100,0%.

When the PID reference setpoint changes, the rate of change can be filtered to reduce the negative impact on the system caused by a sudden reference change.

F9-12

Name: PID feedback filter time

Default value: 0,00 s

Value range: 0,00 - 60,00 s

This setting is used to control the rate of change for the PID feedback value. It reduces noise in the feedback loop, but at the same time reduces the response time.

F9-13

Name: PID output frequency filter time

Default value: 0,00 s

Value range: 0,00 - 60,00 s

This setting is used to control the rate of change for the PID output frequency. Filtering reduces the likelihood of sudden changes in the output frequency, but at the same time reduces the speed of the PID controller response.

F9-15

Name: Proportional gain Kp2

Default value: 20,0

Value range: 0,0 - 100,0

F9-16

Name: Integration time Ti2

Default value: 2,00 s

Value range: 0,01 s - 10,00 s

F9-17

Name: Differentiation time Td2

Default value: 0,000 s

Value range: 0,000 s - 10,000 s

F9-18

Name: PID controller profile switching

Default value: 0 (No switching)

Value range:

In some cases, it may be necessary to switch PID controller profile if a single group of settings cannot satisfy the requirements of the entire process. This setting enables or disables switching between the profiles. After switching, settings F9-15 - F9-17 are used instead of F9-05 ~ F9-07.

0: No switching

Always use settings Kp1, Ti1 and Td1 specified in F9-05 - F9-07.

1: Switching via terminals

For a digital input configured as 43 - "PID controller profile switching", no signal = Kp1, Ti1 and Td1 are used, signal detected = Kp2, Ti2 and Td2 are used.

2: Automatic switching depending on deviation.

If the deviation between reference and feedback is less than the value of F9-19, the PID controller uses the values of Kp1, Ti1 and Td1 from F9-05 - F9-07. If the deviation between reference and feedback is greater than the value of F9-20, the PID controller uses the values of Kp2, Ti2 and Td2 from F9-15 - F9-17.

F9-19

Name: Deviation 1 for switching PID profile

Default value: 20,0%

Value range: 0,0% - F9-20

F9-20

Name: Deviation 2 for switching PID parameters

Default value: 80,0%

Value range: F9-19 - 100.0%

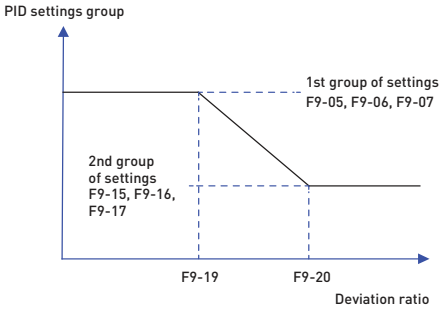

F9-21

Name: PID controller initial setpoint

Default value: 0,0 %

Value range: 0,0% ... 100,0%

F9-22

Name: PID controller initial setpoint hold time

Default value: 0,00s

Value range: 0,00 - 650,00s

For more stable operation of the PID controller at the start, you can set the initial frequency value as a percentage of the maximum frequency, and the holding time for that frequency. After the hold time elapses, the PID controller will subsume control. If F9-21 is set to 0,0, initial setpoint is not used. This function allows you to quickly bring the system into a stable state without overshooting.

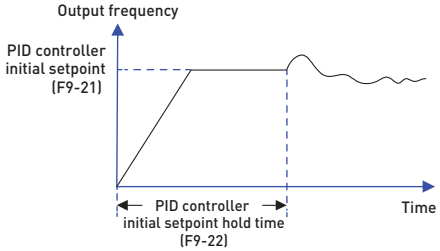

F9-23

Name: Forward maximum deviation

Default value: 1,00%

Value range: 0,00% - 100,00%

F9-24

Name: Reverse maximum deviation

Default value: 1,00%

Value range: 0,00% - 100,00%

This function is used to limit the difference between two cycles at the PID output (2ms/cycle) to prevent the PID output from changing too quickly and to ensure stable operation of the converter.

F9-23 and F9-24 correspond to the maximum absolute value of the output deviation in forward and reverse, respectively.

F9-25

Name: PID controller integration

Default value: 00

Value range:

➢ Units digit: disable integration

0: No

1: Yes

➢ Tens digit: stop or continue integration component after arriving at the frequency reference setpoint

0: Continue

1: Disable

Disabling the integral component:

If integration is disabled, then during a pause (signal to the input with the corresponding F5 parameter set to 22), the integral component of the PID controller stops, and the PID controller continues to use only the proportional and differential components.

If integration is not disabled, the operating principle of the PID controller does not change regardless of the digital input signals.

Stop or continue integration component after arriving at the frequency reference setpoint:

Once the PID controller output reaches the maximum reference frequency value, you can choose to stop or continue using the integral component. This allows for reduction in controller overshoot.

F9-26

Name: Feedback loss detection

Default value: 0,0%

Value range:

0,0%: Loss detection disabled

0,1% - 100,0%

F9-27

Name: Feedback Loss Detection Time

Default value: 0,0 s

Value range: 0,0 s - 20,0 s

When the deviation between the feedback value and the PID controller reference is greater than the value of F9-26, a timer is started with a time setting equal to F9-27, and if the deviation does not fall below F9-26 within the timer interval, the converter issues an error message "Err31" and stops the motor. If F9-26 is set to 0,0, feedback loss detection is not used.

F9-28

Name: PID controller stop

Default value: 0 (PID stop after motor stop)

Value range:

0: PID stop after motor stop

1: PID continue after motor stop

This setting is used to configure the operation of the PID controller after the engine is stopped. Some operating modes, for example, Stand by mode (settings F8-49 - F8-52), require continued operation of the PID controller to correctly perform their function.

7.11 Group FA: Errors and protection

FA-00

Name: Motor overload protection

Default value: 1 (Yes)

Value range:

0: No: The motor overload protection function is disabled, which may lead to motor failure due to overheating. If this setting is disabled or multiple motors are used with one converter, use an external thermal relay to protect the motor.

1: Yes: The converter determines whether the motor is overloaded using inverse time limit curve of motor rated current.

FA-01

Name: Motor overload protection ratio

Default value: 1,00

Value range: 0,20 - 10,00

Inverse time limit curve of motor rated current is built as follows:

1st point: **220% * (FA-01) x motor rated current (F2-03)** for 1 second.

2nd point: **180% * (FA-01) x motor rated current (F2-03)** for 3 seconds.

3rd point: **150% * (FA-01) x motor rated current (F2-03)** for 60 seconds.

This setting should be configured using motor overload capacity data. If it is set too high, the motor may overheat without the converter generating any warning.

FA-02

Name: Motor overload warning ratio

Default value: 80%

Value range: 50% - 100%

As an additional safety measure, a motor overload warning signal can be transmitted via a digital output configured as 6 in the F6 settings group ("Motor overload warning signal"). This setting determines at what percentage of the motor load (see FA-01) the warning signal is generated.

FA-03

Name: Stall over-voltage ratio

Default value: 20

Value range: 0 - 100

This ratio regulates the use of capacitors to suppress overvoltage at the DC bus.

The higher this value, the higher is the utilization of capacitors to reduce the overvoltage.

For low inertia loads, the setting should be minimal. Otherwise, the responsiveness of the system may be degraded. For highly inertial loads, the setting should be higher, otherwise the voltage reduction may be insufficient and an overvoltage error may occur.

FA-04

Name: Stall DC over-voltage level during deceleration

Default value: 135%

Value range: 120% ~ 150%

If DC bus voltage exceeds the value of FA-04 during deceleration, the converter will stop decelerating and will continue to operate at the current frequency until the voltage is reduced.

When FA-03=0, this function is disabled.

FA-05

Name: Stall over-current ratio

Default value: 30

Value range: 0 - 100

This ratio regulates the use of capacitors to suppress overcurrent at the DC bus.

The higher this value, the higher is the utilization of capacitors to reduce the overcurrent.

For low inertia loads, the setting should be minimal. Otherwise, the responsiveness of the system may be degraded. For highly inertial loads, the setting should be higher, otherwise the current reduction may be insufficient and an overcurrent error may occur.

FA-06

Name: Stall over-current setpoint

Default value: 170%

Value range: 100% ~ 200%

If DC bus current exceeds the value of FA-06 during deceleration, the converter will stop decelerating and will continue to operate at the current frequency until the current is reduced.

When FA-05=0, this function is disabled.

FA-07

Name: Enable earth fault protection at power-on

Default value: 1 (Yes)

Value range:

0: No

1: Yes

This parameter is designed to detect single-phase ground fault when powering up the converter.

※ If this function is active, a small voltage is applied to terminals U, V and W after turning on the converter to check for a short circuit.

FA-08

Name: Over-current limit

Default value: 0 (No)

Value range:

0: No

1: Yes

When the motor load current exceeds 180% of the converter's rated current, it will automatically limit the output current to prevent overload.

FA-09

Name: Error auto-clear attempts

Default value: 0

Value range: 0 - 20

If an error occurs during converter operation, it will stop, automatically clear the error, and, after a period of time set in FA-11, continue operation.

FA-09 determines the number of consecutive error auto-clear attempts. If it is exceeded, the converter stops. When FA-09 = 0, error auto-clear is disabled and errors can only be cleared manually.

FA-10

Name: DO output on error auto-clear

Default value: 0 (No action)

Value range:

0: No action

1: Send signal

This setting determines what happens before an error is cleared. If a digital output is configured as 2 in the F6 settings group it will output a signal.

FA-11

Name: Error auto-clear restart

Default value: 1,0 s

Value range: 0,1 s - 100,0 s

Time delay before automatic clear and restart after an error.

FA-12

Name: Input phase loss protection

Default value: 1 (Yes)

Value range:

0: No

1: Yes

FA-13

Name: Output phase loss protection

Default value: 1 (Yes)

Value range:

0: No

1: Yes

Disable for single-phase motors, otherwise the converter will immediately stop with error.

FA-14

Name: First error type

Default value: -

FA-15

Name: Second error type

Default value: -

FA-16

Name: Third (last) error type

Default value: -

Value range: 0 - 51

These settings are used to record the last three error types: 0 = no error, see Section 10 "Troubleshooting" for more details.

FA-17

Name: Third (last) error frequency

Default value: -

Value range:

FA-18

Name: Third (last) error current

Default value: -

Value range:

FA-19

Name: Third (last) error bus voltage

Default value: -

Value range:

FA-20

Name: Third (last) error input terminals status

Default value:

Value range:

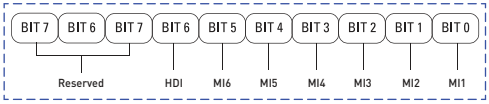

State of input terminals at the time of the last error; if a signal was detected at the input terminal, the corresponding binary bit = 1; if a signal was not detected, the corresponding binary bit = 0. The MI status is displayed as decimal numbers.

FA-21

Name: Third (last) error output terminals status

Default value:

Possible values:

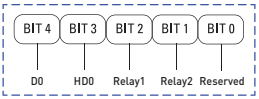

Status of digital outputs at the time of the last error; if the output terminal was closed, the corresponding bit is 1; if the output terminal was open, the corresponding binary bit is 0. The MI status is displayed as decimal numbers.

FA-22

Name: Third (last) error converter status

Default value:

Value range:-

FA-23

Name: Third (last) error power-on time

Default value:

Value range:-

FA-24

Name: Third (last) error total running time

Default value:

Value range:-

FA-27

Name: Second error frequency

Default value:

Value range:-

FA-28
Name: Second error current
Default value:
Value range:-

FA-29
Name: Second error bus voltage
Default value:
Value range:-

FA-30
Name: Second error input terminals status
Default value:
Value range:-

FA-31
Name: Second error output terminals status
Default value:
Value range:

FA-32
Name: Second error converter status
Default value:
Value range:-

FA-33
Name: Second error power-on time
Default value:
Value range:-

FA-34
Name: Second error running time
Default value:
Value range:-
※ Same as FA-17 - FA-24.

FA-37
Name: First error frequency
Default value:
Value range:-

FA-38
Name: First error current
Default value:
Value range:-

FA-39
Name: First error bus voltage
Default value:
Value range:-

FA-40
Name: First error input terminals status
Default value:
Value range:-

FA-41
Name: First error output terminals status
Default value:
Value range:-

FA-42
Name: First error converter status
Default value:
Value range:-

FA-43
Name: First error power-on time
Default value:
Value range:-

FA-44
Name: First error running time
Default value:
Value range:-
※ Same as FA-17 - FA-24.

FA-59
Name: Instant power off
Default value: 0 (No)
Value range:
0: No
1: Decelerate
In the event of a sudden shutdown or voltage drop, the converter reduces the DC bus voltage by reducing the output frequency, and then accelerates back to the frequency setpoint, and continues to operate if the DC bus voltage has stabilized for at least the time set in FA-61.
2: Decelerate to full stop
In the event of a sudden shutdown or voltage drop, the converter reduces the frequency until the motor is stopped.

FA-60

Name: Instant power off acceleration frequency

Default value:

Value range: 0,00 - 100,00%

FA-61

Name: DC Voltage recovery delay

Default value: 0,50 s

Value range: 0,00 s - 100,00 s

FA-62

Name: Minimum DC bus voltage

Default value: 80,0%

Value range: 60,0% - 100,0% of standard DC bus voltage

FA-63

Name: Zero-load protection

Default value: 0 (No)

Value range:

0: No

1: Yes

FA-64

Name: Minimum load level

Default value: 10,0%

Value range: 0,0% - 100.0%

FA-65

Name: Zero-load detection time

Default value: 1,0 s

Value range: 0,0 - 60,0 s

When the zero-load protection operates, the converter monitors the output current, if it is less than FA-64 percentage of the rated current and lasts longer than the period of time specified in FA-65, the running frequency is automatically reduced to 7% of the motor rated frequency. When the current rises above the minimum level, the converter increases the frequency to the frequency setpoint.

Converter response to power failure

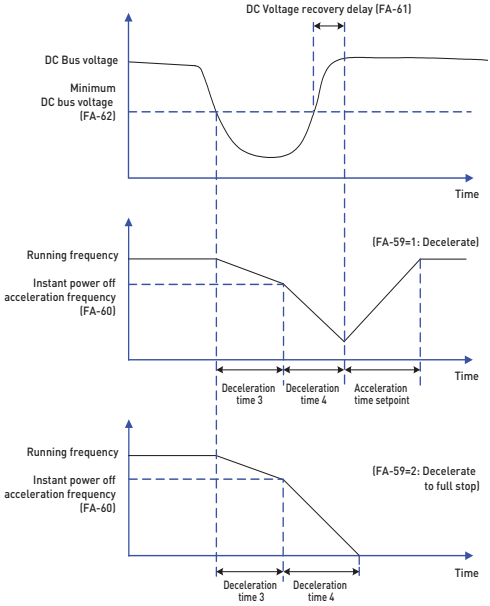

7.12 Group FB: Additional features for winding machines: wobble, length and pulse counters

Winding/unwinding machines, e.g., in the textile industry, often require additional features to facilitate regular, cyclical changes in the output frequency and rotation speed. This group of settings facilitates reconfiguring the converter into a frequency wobble mode with cyclical frequency oscillations.

Frequency wobble chart is shown in the figure below:

FB-00

Name: Frequency wobble mode

Default value: 0

Value range:

0: Relative to frequency setpoint (F0-07)

This mode features a variable oscillation amplitude. The amplitude of the oscillation is described as as a percentage range of the frequency setpoint changes.

1: Relative to maximum frequency (F0-10)

This mode has a fixed oscillation amplitude.

FB-01

Name: Wobble frequency amplitude

Default value: 0,0 %

Value range:0,0% - 100,0%

When set to 0, wobble function is disabled. If wobble is active relative to frequency setpoint (FB-00=0), the actual frequency oscillation amplitude WA is calculated relative to frequency setpoint F0-07 (Frequency source selection) multiplied by FB-01. If wobble is active relative to the maximum frequency (FB-00=1), the actual frequency oscillation amplitude WA is calculated relative to the maximum frequency F0-10 (Maximum frequency) multiplied by FB-01.

Wobble is limited by upper and lower frequency limits.

FB-02

Name: Wobble frequency drop amplitude

Default value: 0,0%

Value range: 0,0% - 50,0%

The amplitude of a frequency drop is defined as the amplitude of frequency oscillations WA x FB-02 (Wobble frequency drop amplitude).

FB-03

Name: Wobble frequency cycle time

Default value: 10,0 s

Value range: 0,1s - 3000,0 s

Time of a single wobble cycle

FB-04

Name: Wobble frequency increase cycle

Default value: 50,0%

Value range: 0,1% - 100,0%

FB-04 is a percentage of FB-03.

Frequency increase time = FB-03 x FB-04, s

Frequency decrease time = FB-03 x (1- FB-04), s

These settings are used to set the fixed material winding length.

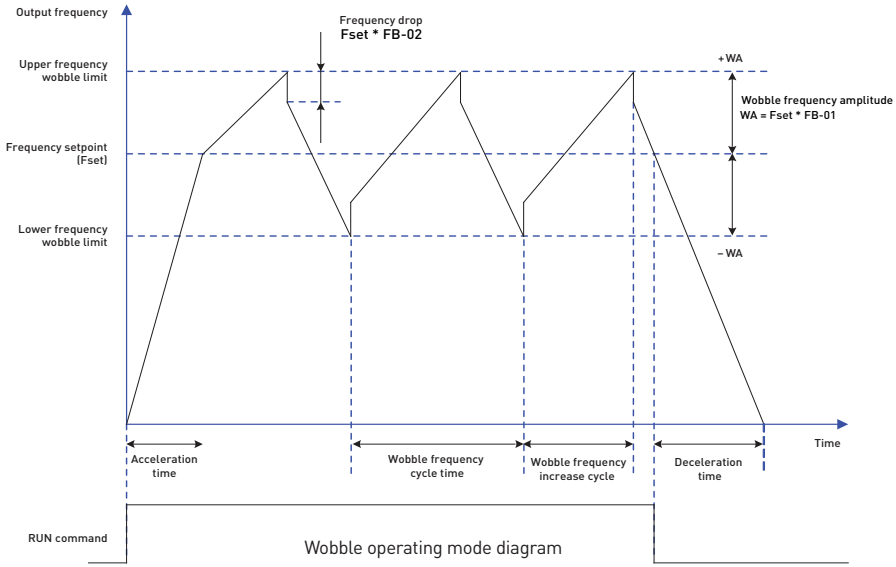

Wobble operating mode diagram

Wound length information is collected by a digital input MI configured to 27 (Winding length counter input). The actual winding length FB-06 is calculated as follows: number of pulses collected by the MI input divided by the value of FB-07 (Pulses per meter). When the actual winding length (FB-06) exceeds the value of FB-05 (Winding length setpoint), the digital output configured as 10 (Length setpoint reached) outputs a signal.

When operating in the winding length control mode, wound length can be reset via a digital input MI configured as 28 (Length count reset).

FB-05

Name: Winding length setpoint

Default value: 1000 m

Value range: 0 m - 65535 m

FB-06

Name: Actual winding length

Default value: 0 m

Value range: 0 m - 65535 m

FB-07

Name: Pulses per meter

Default value: 100,0

Value range: 0,1 - 65535

For some applications, e.g., counting products on an assembly line, VECTOR 100 converter offers a built-in counter. This function can be enabled via a digital input configured to 25 (Counter input).

When the counter value reaches the maximum (FB-08), the digital output, configured to 8 (Maximum counter setpoint reached) outputs a signal and the counter stops.

When the counter value reaches the counter setpoint value (FB-09), a digital output configured to 9 (Counter setpoint reached) generates a signal and the counter continues until it reaches the maximum value.

※ FB-09 must be less than or equal to FB-08.

FB-08

Name: Maximum counter setpoint

Default value: 1000

Value range:1 - 65535

FB-09

Name: Counter setpoint

Default value: 1000

Value range:1 - 65535

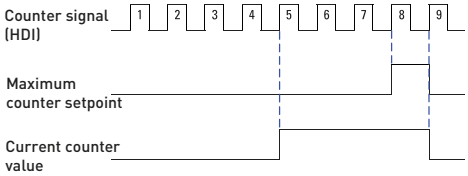

Counter function diagram

7.13 Group FC: ModBus RTU communication settings

FC-00

Name: Communication rate

Default value: 5

Value range:
0: 300 b/sec
1: 600 b/sec
2: 1200 b/sec
3: 2400 b/sec
4: 4800 b/sec
5: 9600 b/sec
6: 19200 b/sec
7: 38400 b/sec
8: 57600 b/sec
9: 115200 b/sec

Communication rate between the master and the converter must be set to the same value, otherwise communication will not be established.

FC-01

Name: Data Format

Default value: 0 (No check (8-N-2)

Value range:

0: RTU, 1 start bit, 8 data bits, no parity, 2 stop bits.

1: RTU, 1 start bit, 8 data bits, parity, 1 stop bit.

2: RTU, 1 start bit, 8 data bits, odd parity, 1 stop bit.

3: RTU, 1 start bit, 8 data bits, no parity, 1 stop bit.

FC-02

Name: Converter address

Default value: 1

Value range:1 - 249

Available addresses for a slave device in a Modbus RTU network must be within 1 - 249 range and must be unique within the network.

FC-03

Name: Response delay

Default value: 2 ms

Value range:0 ms - 20 ms

Sets the response time delay from the converter to the master device.

FC-04

Name: Communication timeout

Default value: 0,0

Value range:

0,0 (not applicable)

0,1 s - 60,0 s

This setting controls the communication timeout error. When set to 0,0 communication errors will not be logged.

FC-05

Name: Communication protocol type

Default value: 1 (standard MODBUS protocol)

Value range:

0: Non-standard MODBUS protocol

1: Standard MODBUS protocol

See Section 9 for details.

FC-06

Name: Current resolution in MODBUS mode

Default value: 0 (0,01 A)

Value range:

0: 0,01 A

1: 0,1 A

This setting is responsible for the number of decimal places in the output current values when using the ModBus RTU interface.

7.14 Group FD: Multi-step mode and sequential PLC

Sequential PLC function enables the inverter to control the frequency setpoints and direction of rotation sequentially according to the parameterized values. In this mode, steps and tasks and the duration of this task are selected.

In multi-step mode, the frequency setpoint can only be changed using signals from the corresponding digital inputs.

Table 7-6 Multi-step setpoint values

Setting	Name	Default value
FD-00	Multi-step setpoint 0	0,0 %
FD-01	Multi-step setpoint 1	0,0 %
FD-02	Multi-step setpoint 2	0,0 %
FD-03	Multi-step setpoint 3	0,0 %
FD-04	Multi-step setpoint 4	0,0 %
FD-05	Multi-step setpoint 5	0,0 %
FD-06	Multi-step setpoint 6	0,0 %
FD-07	Multi-step setpoint 7	0,0 %
FD-08	Multi-step setpoint 8	0,0 %
FD-09	Multi-step setpoint 9	0,0 %
FD-10	Multi-step setpoint 10	0,0 %
FD-11	Multi-step setpoint 11	0,0 %
FD-12	Multi-step setpoint 12	0,0 %
FD-13	Multi-step setpoint 13	0,0 %
FD-14	Multi-step setpoint 14	0,0 %
FD-15	Multi-step setpoint 15	0,0 %
Value range: -100.0% ... 100.0%		

Various combinations of digital inputs configured as "Multi-step signal 1-4" enable selecting one of 16 multi-step setpoints.

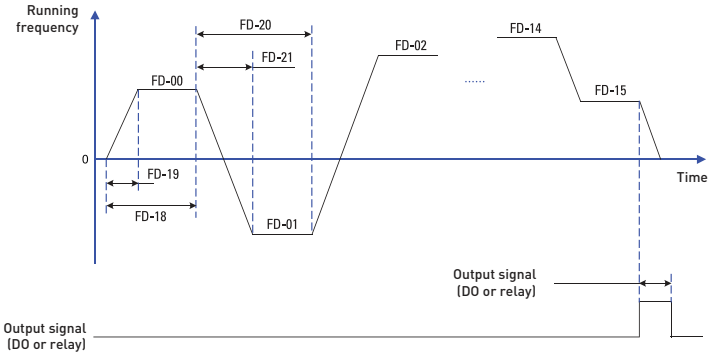

Sequential PLC operating principle

Multi-step setpoint can serve as a frequency setpoint, U/f separation voltage, PID controller setpoint. Multi-step setpoint is a relative value with a range from -100,0% to 100,0%.

When used as a frequency setpoint, it is defined as a percentage of the maximum frequency.

When used as a U/f separation voltage, it is defined as a percentage of the motor rated voltage.

When used as a PID controller setpoint, it does not require any further conversion.

Step setpoints can be switched between by a combination of signals from digital inputs assigned the corresponding functions. For more information, refer to Group F5.

FD-16

Name: PLC operation mode

Default value: 0 (Stop after one cycle)

When the frequency is set by the sequential PLC, the positive and negative values of FD-00 - FD-15 determine the rotation direction of the motor. With negative values, the motor will rotate in the opposite direction.

Value range:

0: Stop after one cycle:

After completing all steps of a single PLC cycle the converter stops and will not restart automatically.

1: Maintain frequency after one cycle:

After completing all steps of a single PLC cycle the converter remains running at a frequency equal to the setpoint of the last PLC step.

2: Re-cycle:

After completing all steps of a single PLC cycle the converter restarts the PLC cycle, repeating all stages indefinitely.

FD-17

Name: PLC state memory

Default value: 00

Value range:

➢ Units digit: save to memory on power off

0: Don't save

1: Save

➢ Tens digit: save to memory when stopped

0: Don't save

1: Save

This setting configures the rules for saving the current PLC state, e.g., step and frequency, to memory on power off or converter stop.

Settings FD-18 - FD-48 are used to configure the running time of each step, with time unit used configured in FD-50.

Table 7-7. PLC step running time settings

Setting	Name	Default value
FD-18	0th step running time	0,0 s (h)
FD-20	1st step running time	0,0 s (h)
FD-22	2nd step running time	0,0 s (h)
FD-24	3rd step running time	0,0 s (h)
FD-26	4th step running time	0,0 s (h)
FD-28	5th step running time	0,0 s (h)
FD-30	6th step running time	0,0 s (h)
FD-32	7th step running time	0,0 s (h)
FD-34	8th step running time	0,0 s (h)
FD-36	9th step running time	0,0 s (h)
FD-38	10th step running time	0,0 s (h)
FD-40	11th step running time	0,0 s (h)
FD-42	12th step running time	0,0 s (h)
FD-44	13th step running time	0,0 s (h)
FD-46	14th step running time	0,0 s (h)
FD-48	14th step running time	0,0 s (h)
Value range:0,0 s (h) - 6500,0 s (h)		

To select the acceleration/deceleration time profiles for each step, use settings FD-19 - FD-49, where the values 0-3 corresponds to acceleration/deceleration time profiles 1-4, see F0-17 - F0-18 and F8-03-F8-08 for more details.

Table 7-8. PLC step acceleration/deceleration profiles

Setting	Name	Default value
FD-19	0th step acceleration/ deceleration time	0
FD-21	1st step acceleration/ deceleration time	0
FD-23	2nd stage acceleration/ deceleration time	0
FD-25	3rd step acceleration/ deceleration time	0
FD-27	4th step acceleration/ deceleration time	0
FD-29	5th step acceleration/ deceleration time	0
FD-31	6th step acceleration/ deceleration time	0
FD-33	6th step acceleration/ deceleration time	0
FD-35	8th step acceleration/ deceleration time	0
FD-37	9th step acceleration/ deceleration time	0

FD-39	10th step acceleration/ deceleration time	0
FD-41	11th step acceleration/ deceleration time	0
FD-43	12th step acceleration/ deceleration time	0
FD-45	13th step acceleration/ deceleration time	0
FD-47	14th step acceleration/ deceleration time	0
FD-49	15th step acceleration/ deceleration time	0
Value range:0 - 3		

FD-50

Name: PLC running time unit

Default value: 0

Value range:

0:s (seconds)

1: h (hours)

Used to define time units used by the PLC.

Each of the steps 0, 3, 6, 9, 12 of a multi-step mode can be controlled not just by a specific setpoint, but also by an external analog or high-speed digital signal, as well as the result of the PID controller action. This function is available both for a multi-stage job and for an integrated sequential PLC.

FD-51

Name: Reference source for step 0 of multi-step control

Default value: 0

Value range:

0: FD-00
1: AI1
2: AI2
3: AI3
4: HDI input
5: PID controller
6: Frequency setpoint (F0-08)

FD-52

Name: Reference source for step 3 of multi-step control

Default value: 0

Value range:

0: FD-03
1: AI1
2: AI2
3: AI3
4: HDI input
5: PID controller
6: Frequency setpoint (F0-08)

FD-53

Name: Reference source for step 6 of multi-step control

Default value: 0

Value range:

0: FD-06
1: AI1
2: AI2
3: AI3
4: HDI input
5: PID controller
6: Frequency setpoint (F0-08)

FD-54

Name: Reference source for step 9 of multi-step control

Default value: 0

Value range:

0: FD-09
1: AI1
2: AI2
3: AI3
4: HDI input
5: PID controller
6: Frequency setpoint (F0-08)

FD-55

Name: Reference source for step 12 of multi-step control

Default value: 0

Value range:

0: FD-12
1: AI1
2: AI2
3: AI3
4: HDI input
5: PID controller
6: Frequency setpoint (F0-08)

7.15 Group FE: Torque control settings

FE-00

Name: Speed/Torque control selection

Default value: 0 (Speed control)

Value range:

0: Speed control

1: Torque control

This setting is used to switch between speed control and torque control modes.

For torque control, the control mode must be set to vector: F0-01 = 0 (SVC).

Digital inputs possess two functions related to switching control modes. To use them, you need to set the following values in the corresponding settings F5-00 - F5-06:

F5-00 - F5-06 = 46: When no signal is detected on digital input, configured to 46 (speed control / torque control switching), the control mode is determined by the value of FE-00. When a signal is detected on a corresponding digital input, the control mode switches.

F5-00 - F5-06 = 29: When a signal is detected on a digital input configured to 29 (Torque control lock), the control mode will always be speed control.

FE-01

Name: Torque control source

Default value: 0 (FE-03 setpoint)

Value range:

0: Setpoint (FE-03)

1: AI1

2: AI2

3: AI3

4: HDI input

5: ModBus RTU

6: Min. (AI1, AI2)

7: Max. (AI1, AI2)

FE-03

Name: Torque setpoint

Default value: 150%

Value range: -200,0% ... 200,0%

FE-01 is used to configure the torque control setpoint source.

The torque setpoint is a percentage value. 100,0% corresponds to the rated motor torque (dependent on the rated current of the converter). The reference range from -200.0% to 200.0% indicates that the maximum motor torque can reach double the rated torque.

A positive torque value indicates forward rotation, a negative torque value indicates reverse rotation.

FE-04

Name: PWM control

Default value: 0 (Not in use)

Value range:

0: Not in use

1: In use

In torque control mode, if the torque is less than the reference, the motor will accelerate until it reaches the speed corresponding to the maximum frequency of the converter. In this mode, frequency can be limited during forward and reverse rotation of the motor.

Continuous variation of the maximum frequency in torque control mode can be achieved by changing the upper frequency limit.

FE-05

Name: Max. forward frequency in torque control mode

Default value: 50,00 Hz

Value range: 0,00 Hz - F0-10 (Max. frequency)

FE-06

Name: Max. reverse frequency in torque control mode

Default value: 50,00 Hz

Value range: 0,00 Hz - F0-10 (Max. frequency)

FE-07

Name: Acceleration time in torque control mode

Default value: 0,00 s

Value range: 0,00 s - 65000 s

FE-08

Name: Deceleration time in torque control mode

Default value: 0,00 s

Value range: 0,00 s - 65000 s

In torque control mode, the difference between the load torque and the torque setpoint will determine engine acceleration. Therefore, the rotation speed can change very rapidly, which can lead to excessive noise and mechanical overload of the motor and associated machine. Increasing the acceleration/deceleration time for torque control can smoothen speed transitions. For applications requiring very rapid response time this value can be set to 0.

An example of such an application is two motors driving the same load. To balance the load distribution, one converter will act as a master and operate in speed control mode, while the second will operate as a slave in torque control mode. The slave receives the current torque reading from the master as a torque reference setpoint and must follow it quickly. In this case, the acceleration/deceleration time of the slave converter must be set to 0.

FE-09

Name: Static friction compensation

Default value: 0,0%

Value range: 0,0% - 200,0%

This setting is used to compensate for static friction during motor startup.

FE-10

Name: Static friction compensation cutoff frequency

Default value: 10,00 Hz

Value range: 0,00 Hz - F0-10 (maximum frequency)

When the operating frequency reaches the setpoint, the static friction compensation will be disabled.

FE-11

Name: Sliding friction compensation

Default value: 0,0%

Value range: 0,0% - 200,0%

Used to compensate for sliding friction during operation.

FE-12

Name: Rotary inertia compensation

Default value: 0,0 %

Value range: 0,0% - 200,0%

During acceleration or deceleration, this value is used to compensate for load inertia. During speed changes, it compensates for counter torque to ensure proper balance.

FE-13

Name: Acceleration time for rotary inertia compensation

Default value: 0 s

Value range: 0,00 s - 65000 s

This setting is used to specify the time period for inertia compensation during acceleration from 0,0% to 200%.

FE-14

Name: Deceleration time for rotary inertia compensation

Default value: 0 s

Value range: 0,00 s - 65000 s

This setting is used to specify the time period for inertia compensation during deceleration from 200,0% to 0%.

FE-15

Name: Switching frequency upper limit

Default value: 12,00 Hz

Value range: 0,000 Hz - 15.000 Hz

This settinv is only valid in scalar U/f control mode. Typically, this value does not need to be edited.

FE-16

Name: PWM control mode

Default value: 0 (Asynchronous)

This parameter is only valid in scalar U/f control mode.

Value range:

0: Asynchronous mode

By default, the asynchronous PWM control mode is used for output frequencies up to 85 Hz.

1: Synchronous mode

When operating at an output frequency greater than 85 Hz, it may be necessary to vary the PWM frequency linearly with the output frequency to improve the quality of the output voltage. The effect of the PWM frequency / output frequency ratio on the quality of the output voltage is minimal at output frequency values up to 85 Hz, therefore, to optimize the computing power of the converter, it is best to use the Asynchronous PWM mode.

FE-17

Name: Dead zone compensation

Default value: 1 (Compensation mode 1)

Value range:

0: No compensation
1: Compensation mode 1
2: Compensation mode 2

This mode should be configured only if there are oscillations in the motor or when there are special requirements to the output voltage waveform.

※ For high-power systems, select compensation mode 2.

FE-18

Name: PWM random distribution depth

Default value: 0 (No random distribution)

Value range:

0: No random distribution
1-10: Random distribution depth

Adjusting the distribution depth of the random PWM frequency will help reduce the noise from the motor and reduce the electromagnetic interference from the converter.

FE-19

Name: Fast current limit

Default value: 1 (Yes)

Value range:

0: No
1: Yes

Activating the fast current limit helps reduce the possibility of overcurrent, which ensures trouble-free operation of the converter.

If the fast current limit is active for a n extended period of time, the converter may begin to overheat. If Err40 error starts to appear during fast current limit operation, you must stop the inverter.

FE-20

Name: Current detection compensation

Default value: 5

Value range: 0 - 100

Sets current detection compensation value. Changing the default setting is not recommended. If the value is too high, the motor's drivability may deteriorate.

FE-21

Name: SVC optimization

Default value: 1 (Optimization mode 1)

Value range:

0: No optimization

1: Optimization mode 1
For applications where a more linear torque change is required.

2: Optimization mode 2
For applications where higher speed control accuracy is required.

※ For most applications, mode 1 will be appropriate.

FE-22

Name: Undervoltage setpoint

Default value: 80%

Value range: 60% - 140%

Used to configure undervoltage protection at the input. Percentage of the inverter rated voltage. For example, for:

Single-phase 220 V: limit of 200 V.

Three-phase 380 V: limit of 350 V.

8 Quick setup guide

This section contains short instructions for setting up converters in various applications.

8.1 Resetting converter settings and adding engine parameters.

Use control panel keys to enter the settings. For more information on operating the control panel, see Section 5 of this manual.

Before Starting If the converter has previously been used in any other application, it is recommended that you reset the device to default settings before starting setup. To reset, change setting F0-27 to 3.

Operating in scalar control mode – Basic settings

Press the "PROG" button, the first level of settings groups will appear on the display. Scrolling between groups of settings using the arrow buttons "▲" and "▼". To enter the electric motor settings group, navigate to group F2 using the "▲"/"▼" buttons and press «PROG». Going through group F2 settings, enter the the parameters of the connected motor. To move the cursor, press the left arrow button. To save the setting, press "ENTER".

Settings for initial motor setup

F2-01: rated motor power, kW

F2-02: rated motor voltage, V

F2-03: rated motor current, A

F2-04: rated motor frequency, Hz

F2-05: rated motor rotation speed, rpm

Set the motor parameters according to its nameplate. Exit to the main menu by double pressing "PROG" button.

Starting the electric motor

Press the "RUN" button to start the motor. Set the motor speed using the potentiometer dial.

Check whether the direction of rotation matches the direction indicated by the LED indicators. Press the STOP button to stop the engine.

The direction of rotation can be changed by swapping two phases in the motor power cable, no earlier than 10 minutes after disconnecting the converter from the mains.

To operate in scalar mode, you don't have to determine the internal parameters of the motor using autoconfig. However, to optimize the control loops, perform motor autoconfig.

Vector mode operation.

To switch to vector control mode, enter motor nameplate parameters as described above prior to starting the converter. Entering correct parameters of the controlled electric motor ensures optimal frequency and torque control.

Automatic identification and configuration of electric motor parameters is performed as follows:

Ensure that the control signal source is switched to converter control panel. Then enter the following parameters according to the motor nameplate:

- F2-01: rated motor power, kW
- F2-02: rated motor voltage, V
- F2-03: rated motor current, A
- F2-04: rated motor frequency, Hz;
- F2-05: rated motor rotation speed, rpm.

Ensure that the motor is disconnected from the load, set F2-11 to "2", "rune" message will appear on the screen.

Press the "RUN" button on the control panel, the converter will start the electric motor and determine the following parameters:

- F2-06: Motor stator resistance;
- F2-07: Motor rotor resistance;
- F2-08: Motor windings inductance;
- F2-09: Mutual rotor/stator inductance
- F2-10: Zero-load current.

The automatic configuration of electric motor parameters ends when the value "0000" appears on the display.

If the electric motor cannot be disconnected from the load, set F2-11 to "1", "rune" message will appear on the screen. Press the "RUN" button on the control panel, the converter will start the electric motor and determine the following parameters:

- F2-06: Motor stator resistance;
- F2-07: Motor rotor resistance;
- F2-08: Motor windings inductance.

The automatic configuration of electric motor parameters ends when the value "0000" appears on the display.

After performing any type of autoconfig, the converter would have gathered enough data to operate in vector control mode.

8.2 Connecting multiple motors

If a process requires simultaneously driving several pumps or fans with a similar frequency, a single converter with sufficient power margin can be utilized. The following conditions must be met

1) Converter characteristics: when sizing a converter for a multi-drive system, use the total of of the rated currents of all motors in a system, taking into account reserve of power to compensate for losses if the converter and controlled motors are far apart. Upsize the converter to the next larger model by the sum total of all motor rated currents. For example, if a multi-drive system includes 5 motors with a current of 4 A, the sum total of rated currents will be 20 A. After upsizing by one step, the appropriate converter model would be VECTOR-100 EKF VT100-015-3B, rated for 32 A.

2) Controlled motors must be similar in terms rated power, speed, and voltage, since the output frequency of the converter cannot be adjusted individually for different motor sizes and specifications during simultaneous operation. For the same reason, driving multiple motors simultaneously is only possible in scalar mode.

3) When designing electrical connections, make sure to include motor overload protection devices, as the converter will be operating at a higher current rating than the rated motor current, which can lead to motor overload.

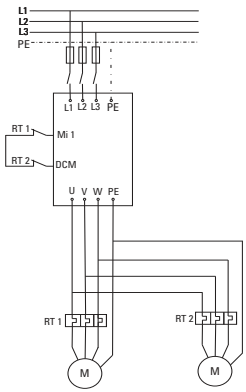

Configurable settings
Controlling multiple motors with a single frequency converter is possible only in scalar mode. Configure the basic settings accordingly. See this manual for more details. The difference with a single-motor system would be the motor rated current. For correct operation, set the value of setting "F2-03: motor rated current" to the sum of the rated currents of all driven motors.
In this configuration, the built-in motor overload protection feature of the converter will not be active, necessitating the use of an external overload protection device.
Use either motors with built-in overload protection or external thermal relays with a normally closed contact. All of them must be connected in series according to the diagram below, as well as connected to an appropriately configured digital input.
Digital input mode F5-00 - F5-06 must be configured to 33: External error signal - NC

8.3 Control by external input

Start and stop via external digital signals, frequency adjustment via external analog voltage signal 0 - 10 V

Settings:
F0-02=1, F0-03=2, F5-01=02
Start and stop:
"MI1—DCM" closed - direct rotation;
"MI2—DCM" closed - reverse rotation;
"(MI1, MI2)—DCM" open – stop.
Frequency adjustment:
changing the value of an external analog voltage signal (AI1, GND).

Start and stop via external digital signals, frequency adjustment via external analog current signal 4 - 20 mA

Settings:
F0-02=1, F0-03=3, F5-01=02 ,F5-13 – 2.
Start and stop:
"MI1—DCM" closed - direct rotation;
"MI2—DCM" closed - reverse rotation;
"(MI1, MI2)—DCM" open – motor stop.
Frequency adjustment:
changing the value of an external analog current signal (AI2, GND).

The value of setting F5-13 determines the minimum current that the sensor will produce; for current sensor settings, the value in this parameter is twice the current value in mA (value of 2 is 4 mA, value of 10 for F5-15 will correspond to 20 mA) .

Changing the setpoint

Increasing or decreasing frequency using external digital signals:

(1) start/stop via control panel
Settings:
F0-02=0, F0-03=0, F5-00=06, F5-01=07
Starting and stopping:
forward rotation – "RUN" button,
reverse rotation – "BACK/FUNC" button,
stopping the engine – "STOP/RESET" button.
Frequency adjustment:
"MI1—DCM" closed – frequency increase;
"MI2—DCM" closed – frequency reduction.

(2) start/stop via external digital signals
Settings:
F0-02=1, F0-03=0, F5-00=06, F5-01=07, F5-02=01, F5-03=02
Starting and stopping:
"MI3—DCM" closed - forward rotation;
"MI4—DCM" closed – reverse rotation;
"(MI3, MI4)—DCM" open -motor stop.
Frequency adjustment:
"MI1—DCM" closed – frequency increase;
"MI2—DCM" closed – frequency reduction.
ATTENTION!
To save the frequency setpoint value on power off, configure F0-23=1.

8.4 Switching between manual and automatic modes

VECTOR-100 frequency converter provides for switching control modes for frequency setpoint via digital inputs.
Settings F5-00 to F5-06 of any digital input - MI1 to MI6, or high-speed digital input can be configured as follows:

Frequency reference setpoint selection
Configuring setting F5-00 – F5-06 to 18, enables the digital input to switch frequency setpoint from source A (F0-03) to source B (F0-04) on receiving a signal. Additionally, this setting can be configured in F0-07. Depending on the value of F0-07, an input wit switch between setpoint A, setpoint B, or the result of calculation between these values.

Start command source selection
If setting F5-00 - F5-06 is configured to 20, upon receiving the signal the corresponding input will switch the command source from terminals to Modbus RTU, and vice versa, depending on which mode was initially selected by setting F0-02.
Using these settings, a single switch can transfer control between manual and Modbus RTU.

8.5. PID pressure control

To facilitate closed-loop control for maintaining consistent characteristics in systems where motor speed varies, a PID controller is often implemented for frequency adjustment.
The VECTOR 100 frequency converter can be configured to regulate pressure in a circuit via pump control. This is achieved by configuring the converter to manage the desired pressure levels.
For PID feedback, a pressure transmitter with an analog output is typically employed. This transmitter should be connected to the converter's analog input.
Detailed instructions for connecting the pressure transmitter to the analog input terminals are provided in Section 4.2 of the manual.
Additionally, when configuring the system, it is important to consider the different minimum signal requirements for current and voltage inputs. For voltage mode, set parameter F5-13 to 0. For current mode, which is the default setting for a 4-20 mA sensor, set F5-13 to 2 for analog input AI1.
If the operating signal deviates from the standard ranges of 4-20 mA or 1-10 V, settings F5-13 (AI1 minimum voltage) and F5-15 (AI1 maximum voltage) need to be adjusted accordingly. Each increment of the parameter for the analog signal's limits equates to 1 V in voltage mode and 2 mA in current mode.

Primary converter settings
F0-02 – Control source selection: control panel (0), terminals (1), ModBus (2)
F0-03=8 selects PID controller as the primary frequency reference source
It may be necessary to fine-tune the minimum or maximum frequency values to align with the specific characteristics of the motor or pump being used. The following parameters allow for this adjustment:
F0-12 - Maximum operating frequency in Hz
F0-14 - Minimum operating frequency in Hz

PID controller settings:
F9-00 - PID control source
F9-01 - PID control setpoint
The PID controller reference and feedback settings are percentage values.
F9-02 - PID feedback source
F9-03 - PID control direction
In this system, to increase pressure, it is necessary to increase the motor speed; conversely, to decrease pressure, the motor speed must be reduced. Utilizing the positive action of the PID controller facilitates this control.
The functionality of the PID controller can be verified by observing: U0-15 (PID controller setpoint) and U0-16: (PID controller feedback). Monitoring the feedback value and comparing it to the motor speed as the setpoint is approached provides insight into the accuracy of the PID settings and verifies that the PID feedback is being correctly received.

Protection against feedback sensor failure and dry running.
If the difference between the feedback value and the PID setpoint exceeds the threshold set by F9-26, a timer is initiated with a duration specified by F9-27. Should the deviation persist beyond this threshold, the converter will issue an "Err31" alarm message and will stop the motor to prevent damage. If F9-26 is set to 0,0, feedback loss detection is disabled.

Standby mode
In certain cases, when the required system pressure is reached, and demand is low, the converter can reduce the frequency to a level where the pump and motor will continue to run, but the pressure will not increase. To conserve energy and extend the service life of the pump and motor, the Standby Mode can be activated:
F8-49: Wake up frequency. When the frequency reference value exceeds this value, the inverter will exit Standby Mode after the delay set by F8-50 (Wake up frequency delay).
F8-51: Standby frequency. When the frequency reference value falls below the value of F8-51, the inverter will enter Standby Mode and stop after the time specified by F8-52.
For Standby Mode to function properly, it is essential to adjust parameter F9-28 to 1, which ensures continued calculation of the controller value even after the motor has stopped.

8.6. PID temperature control

Configuring the PID controller for temperature regulation within a closed-loop system reliant on motor speed involves a process similar to that described in section 8.5. However, there are key differences to consider when setting up for temperature control:
1) For temperature feedback, you have the option to use a temperature sensor that provides a 4-20 mA or 1-10 V output signal. Alternatively, a thermistor coupled with a converter emitting the same range of output signals may be used. Either of these devices should be connected to the analog input of the converter to enable accurate temperature feedback to the PID controller.
2) It is critical to comprehend how the motor's function, as controlled by the converter, affects temperature within the system. Taking a ventilation system as an example, if the fan, governed by the converter, is circulating warm air, it is advisable to apply positive control direction in the PID setting F9-03. If cool air is pumped in, then, accordingly, negative control must be used in setting F9-03.

9 Communication Protocols: MODBUS RTU

VECTOR-100 frequency converters are equipped with an RS-485 interface that supports the MODBUS RTU communication protocol. This interface enables centralized management of single or multiple converters via a Programmable Logic Controller (PLC), a computer, or another master device. Through the RS-485 connection, users can issue commands to the converters, modify operational tasks, alter function codes of parameters, monitor operational status, and access information about the converters' status and error codes.

9.1 Protocol info

Modbus is a widely adopted protocol for industrial data communication. It facilitates the exchange of information between a PLC or PC and other devices over a network, such as RS-485. As an industry standard, Modbus allows for interoperability, enabling devices from various manufacturers to be integrated into a centralized communication system.

The Modbus protocol operates in two communication modes: ASCII and RTU. The VECTOR-100 series supports the RTU mode exclusively. All devices on the network must operate in the same mode and share the same communication settings, including baud rate, parity bit, data bits, and stop bits.

9.2 Application

In a Modbus network, the controller (PLC) or computer (PC) acts as the master (MASTER), while the frequency converters serve as slave (SLAVE) devices. The master device initiates communication by sending commands to the slaves, which in turn respond to these commands. Prior to deployment, it is essential to configure the converters for MODBUS operation by setting the appropriate parameters for seamless integration into the Modbus network.

9.3. System connection

(1) Interface

RS-485

(2) Transmission mode

Transmission mode – serial, asynchronous and half-duplex. This means that at any given moment, only one device (either the master or a slave) is transmitting data, while the other is receiving. Data is sent in discrete packets, known as frames, following the asynchronous serial communication protocol.

(3) Topological structure

In a system configured as "Single Master - Multiple Slaves," the range of slave device addresses is from 1 to 249.

An address of 0 is reserved for broadcast communication. Each slave device must be assigned a unique address within the network.

> **ATTENTION!**
> A broadcast message does not require a response.

a) PC connection

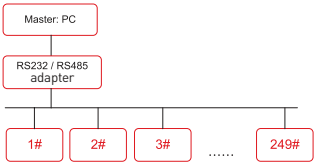

b) PLC connection

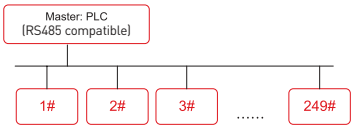

9.4 Connection diagrams

VECTOR series frequency converters feature 'S+' and 'S-' terminals dedicated to Modbus communication.

The connections can be configured in two ways:

1) Serial (Daisy Chain) Connection

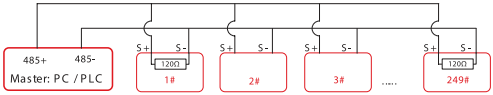

> **ATTENTION!**
> Terminal resistors (120 Ohm) must be connected to the first (1#) and last (249#) converters in the network.

2) Star connection

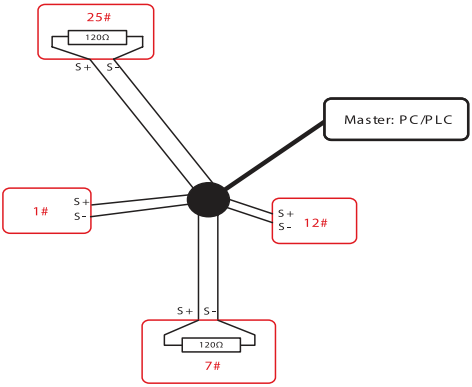

> **ATTENTION!**
> Terminal resistors are connected to two converters that have a maximum wiring length (25# and 7#).

9.5 Protocol description

VECTOR-100 frequency converters come with an RS-485 asynchronous serial interface. In the network, only the master device can initiate a request or command. Slave devices, which include the converters or other compatible equipment, respond to the master's request/command or execute the received command. Master devices can be PCs, PLCs, or any industrial microprocessor-based equipment.

Slave devices can be converters or other equipment using the same protocol. All slave devices will respond to master requests/commands if the message address is set to 0 (broadcast message).

9.6 Communication data structure

The Modbus RTU protocol data format used by VECTOR-100 converters is as follows:

In RTU mode, there must be a minimum inter-frame delay, referred to as a "silence interval," of at least 3.5 bytes.

The protocol employs a CRC-16 checksum to verify data integrity. All data within a message frame, except for the checksum itself, is included in this calculation. See CRC check for details. It is important to ensure that the "silence interval" of at least 3,5 bytes is observed both before the start of a new message frame and following the end of a transmission.

In RTU mode, data is transmitted in a continuous stream. If the interval between frames exceeds 3.5 bytes, the receiving device will discard the incomplete message and interpret the next byte as the start of a new frame. Conversely, if the interval is less than 3.5 bytes, the slave device treats it as a continuation of the previous frame. A CRC error, which may result from frame collisions or other transmission issues, will be flagged as a communication error. RTU frame format:

START	**Transmission time: 3,5 bytes**
Slave device address (ADDR)	Network address: 0 to 249
Command code (CMD)	03H: Read settings from slave 06H: Write settings to slave
DATA (N-1)	Data: Address of function code setting, number of function code settings, value of function code setting, etc.
DATA (N-2)	
.....	
DATA 0	
CRC low byte	CRC value
CRC high byte	
END	Transmission time: 3,5 bytes

9.7 Command code and communication data description

Command code: 03H, reading N words. (Maximum 12 words)

For example, the start address F002 of the inverter reads 2 data registers.

Command from the master device		**Response from the slave device**	
Address (ADR)	01H	Address (ADR)	01H
Command code (CMD)	03H	Command code (CMD)	03H
High byte of start address	F0H	Number of bytes	04H
Low byte of start address	02H	Data high byte F002H	00H
High byte of the number of registers	00H	Data low byte F002H	00H
Low byte of the number of registers	02H	Data high byte F003H	00H
CRC low byte	56H	Data low byte F003H	01H
CRC high byte	CBH	CRC low byte	3BH
		CRC high byte	F3H

Command code: 06H, writing a single word

For example, writing 5000(1388H) to address F00AH of a converter with address - 02H.

Command from the master device		**Response from the slave device**	
Address (ADR)	02H	Address (ADR)	02H
Command code (CMD)	06H	Command code (CMD)	06H
Data address high byte	F0H	Data address high byte	F0H
Data address low byte	0AH	Data address low byte	0AH
High byte of data	13H	High byte of data	13H
Low byte of data	88H	Low byte of data	88H
CRC low byte	97H	CRC low byte	97H
CRC high byte	ADH	CRC high byte	ADH

CRC data integrity check

Data integrity is verified using a CRC (Cyclic Redundancy Check) checksum frame. The CRC field consists of 2 bytes (16 bits). It is appended to each frame by the transmitting device. Upon receiving the frame, the receiving device recalculates the CRC and compares it to the CRC field in the message. If the values differ, the transmission is considered to have encountered an error.

For CRC calculation, only the data bits are used; the stop bit and parity bit are excluded.

Below is a simple C language function for CRC calculation provided for reference:

```
unsigned int crc_cal_value(unsigned char *data_value, unsigned
char data_length)
{
int i;
 unsigned int crc_value = 0xffff;
 while(data_length--)
 {
 crc_value ^= *data_value++;
 for(i=0;i<8;i++)
{
 if(crc_value&0x0001)
 crc_value = (crc_value>>1)^0xa001;
else
 crc_value = crc_value>>1;
}
}
return(crc_value);
}
```

Determining the setting address for communication

Direct access to parameters via communication is essential for monitoring the inverter through Modbus RTU. Setting addresses are calculated as follows:

(1) Parameter group address F0 - FF:

High byte: F0 - FF (group F),

Low byte: 00 - FF

(2) Parameter group address U0:

High byte: 70H,

Low byte: 00 - FF

For example:

F3-12, address - 0xF30C

FC-05, address - 0xFC05

U0-03, address - 0x7003

ATTENTION!

- Group FF: Settings in this group are neither readable nor writable.
- Group U0: Settings in this group are read-only; they cannot be modified.
- Certain settings cannot be changed while the inverter is in operation, and some are immutable in any state. When modifying setting values, be mindful of range, units of change, and other instructions.

Excessive writing/altering of settings could reduce the lifespan of the EEPROM where settings are stored. To avoid this, it is advisable not to permanently store some settings in EEPROM but to modify them in RAM instead. For group F settings, users can bypass EEPROM storage by changing the high byte from F to 0.

The addresses for corresponding function codes are detailed below:

Settings group address F0~FF:

High byte: 00 - FF,

Low byte: 00 - FF

Settings group address U0:

High byte: 70H,

Low byte: 00 - FF

For example:

F3-12, address - 030C

FC-05, address - 0C05

This address can only be used for writing to RAM. Reading at this address is prohibited and will be perceived by the converter as a non-existent address.

Addresses of primary settings for communication

Frequency setpoint (register 1000H) is configured over the communication protocol as a percentage multiplied by 100, "10000" is equal to "100,00%", "-10000" is equal to "–100,00%".

The percentage value is tied to the maximum frequency (F0-10).

The torque percentage is tied to the rated zero-load current (F2-10).

Primary settings of the converter

Register address	Setting	Min. meas. unit
1000H	* Set communication frequency (-10000 to 10000) (decimal)	0,01 Hz
1001H	Running frequency	0,01 Hz
1002H	Bus voltage	0,1 V
1003H	Output voltage	1 V
1004H	Output current	0,01 A
1005H	Output power	0,1 kW
1006H	Output torque	0,1%
1007H	Running speed	1
1008H	MI input status	1
1009H	AO1, AO2 output status	1
100AH	AI1 voltage	0,01 V
100BH	AI2 voltage	0,01 V
100CH	AI2 voltage	0,01 V
100DH	Counter value	1
100EH	Winding length	1
100FH	Shaft rotation speed	1
1010H	PID setpoint	1
1011H	PID feedback	1
1012H	PLC stage	1
1013H	HDI input signal frequency	0,1 kHz
1014H	Feedback frequency	0,1 Hz
1015H	Remaining runtime	0,1 min
1016H	AI1 voltage before calibration	0,001 V
1017H	AI2 voltage before calibration	0,001 V
1018H	AI3 voltage before calibration	0,001 V
1019H	Linear speed	1 m/min
101AH	Time online	1 min
101BH	Current running time	0,1 min
101CH	Reserve	
101DH	Communication setpoint	1
101EH	Actual feedback speed	1 m/min
101FH	Primary frequency (display A)	0,01 Hz
1020H	Primary frequency (display B)	0,01 Hz

Sending commands to the converter (write only)

Register address	Command
2000H	0001: Forward rotation
	0002: Reverse rotation
	0003: Jog forward
	0004: Jog reverse
	0005: Coasting stop
	0006: Deceleration stop
	0007: Reset error

Converter status: (read only)

Register address	Description of the status message
3000H	0001: Forward rotation
	0002: Reverse rotation
	0003: Stop

Password for blocking read/write access to settings: (if the reply is 8888H, the password is correct)

Register address	Password entry
1F00H	*****

Output terminal control

Register address	Command reaction
2001H	BIT0: Signal to HDO output
	BIT1: Signal to DO output
	BIT2: Signal to RELAY1 output
	BIT3: Signal to RELAY2 output
	BIT4 - BIT9: Reserved

AO1 Analog output control: (write only)

Register address	Command
2002H	0-7FFF is equal to 0%-100%

AO2 Analog output control: (write only)

Register address	Command
2003H	0-7FFF is equal to 0%-100%

High-speed output frequency control: (write only)

Register address	Command
2004H	0-7FFF is equal to 0% -100%

Error messages (register address 8000H):

Error Information
0000: No error
0001: Reserved
0002: Acceleration over-current
0003: Deceleration over-current
0004: Constant speed over-current
0005: Acceleration over-voltage
0006: Deceleration over-voltage
0007: Constant speed over-voltage
0008: Buffer register overload
0009: Under-voltage
000A: Converter overload
000B: Motor overload
000C: Reserved
000D: Output phase loss
000E: IGBT module overheat
000F: External fault
0010: Communication error
0011: Contactor error
0012: Current check error
0013: Motor autoconfig error
0014: Reserved
0015: Error reading/writing settings
0016: Converter component failure
0017: Motor short circuit
0018: Reserved
0019: Reserved

Error Information
001A: Running time limit reached
001B: User error 1
001C: User error 2
001D: Time online limit reached
001E: Zero-load operation
001F: PID feedback loss during operation
0028: Fast current time limit exceeded
0029: Motor switching while running
002A: Excessive speed deviation
002B: Engine overspeed

9.8 Communication group settings (Group FC)

FC-00	**Communication rate, bit/s**	**Default value.**	**5**
	Values	Units digit: Modbus 0: 300 bit/s 1: 600 bit/s 2: 1200 bit/s 3: 2400 bit/s 4: 4800 bit/s 5: 9600 bit/s 6: 19200 bit/s 7: 38400 bit/s 8: 57600 bit/s 9: 115200 bit/s	

This setting is used to set up communication (baud) rate between the master device and the converter. Please note that the baud rate of the control device and the converter must be the same, otherwise communication between them will not be established.

FC-01	**Data Format**	**Default value**	**0**
	Values	0: No check: data format <8-N-2> 1: Parity check: data format <8-E-1> 2: Odd parity check: data format <8-O-1> 3: No check: data format <8-N-1>	

Data format must be set up the same for the master device and the converter. Otherwise communication between them will not be established.

FC-02	**Local address**	**Default value**	**1**
	Values	1-249, 0 – broadcast address	

When 0 is used as the command address, the master device will broadcast commands.

The local network address must be unique for each slave device.

FC-03	**Response delay**	**Default value**	**2 ms**
	Values	0 ms	

The response delay controls the delay between receiving a command from the master device and sending a return response. If the response delay is less than the clock cycle in the control system, then the response delay is the system's clock cycle. If the response delay is longer than the system's clock cycle, the converter will not respond to the master device before the delay time has expired.

FC-04	**Communication timeout**	**Factory settings**	**0,0 s**
	Values	0.0 s (not active) 0,1 - 60,0 s;	

When the value is set to 0,0s, the communication timeout function is not used.

When the value is greater than 0: an error (Err16) will be displayed if the time between two packets exceeds the timeout value. In most cases, this setting should be set to 0 seconds. In real-time systems, this setting can be used to monitor network status.

FC-05	**Communication protocol type**	**Default value**	**1**
	Values	0: non-standard Modbus protocol 1: standard Modbus protocol	

FC-05=1: standard MODBUS protocol

This setting is used to determine the output current unit in Modbus mode.

FC-06	**Current resolution in MODBUS mode**	**Default value**	**0**
	Values	0: 0,01 A 1: 0,1 A	

10 Troubleshooting

10.1 Error codes and troubleshooting

Code	Error	Potential causes	Solutions
Err01	Converter short circuit	1. Short circuit or ground fault at the converter output 2. The cable connecting the motor to the inverter is too long 3. Module overheating 4. Loose cable connection to the converter 5. Incorrect operation of the control board 6. Incorrect operation of the power board 7. Incorrect operation of the IGBT module	1. Check the electric motor and motor cable. 2. Install a choke or output filter. 3. Check the operation of the cooling system. 4. Make sure all cables are properly connected. 5, 6, 7. Contact technical support
Err02	Over-current during accelera-tion	1. Short circuit or ground fault at the converter output 2. Motor not configured for vector control mode 3. Acceleration time too short 4. Incorrect manual torque boost or V/f control curve 5. Converter supply voltage is too low 6. Starting the electric motor 7. Sudden load increase during acceleration 8. Low converter power	1. Check the motor and motor cable 2. Set motor parameters 3. Increase acceleration time 4. Adjust torque boost or V/f control curve 5. Ensure voltage is within acceptable range 6. Enable PRM detection or start the motor after bringing it to a complete stop 7. Remove the additional load 8. Replace with a higher power converter model
Err03	Over-current during decelera-tion	1. Short circuit or ground fault at the converter output 2. Motor not configured for vector control mode 3. Deceleration time too short 4. Low supply voltage 5. Sudden load increase during acceleration 6.Braking module and braking resistor not installed	1. Check the motor and motor cable 2. Set motor parameters 3. Increase deceleration time 4. Ensure voltage is within acceptable range 5. Remove the additional load 6. Install the braking module and braking resistor
Err04	Over-current during constant speed operation	1. Short circuit or ground fault at the converter output 2. Motor not configured for vector control mode 3. Low supply voltage 4. Sudden load increase during acceleration 5. Low converter power	1. Check the motor and motor cable 2. Configure motor parameters 3. Ensure voltage is within acceptable range 4. Remove the additional load 5. Replace with a higher power converter model
Err05	Over-voltage during accelera-tion	1. Converter supply voltage is too high 2. An external force is acting on the motor during acceleration. 3. Acceleration time is too short. 4. Braking module and resistor not installed	1. Ensure voltage is within acceptable range 2. Remove external force 3. Increase acceleration time 4. Install the braking module and braking resistor
Err06	Over-voltage during decelera-tion	1. Converter supply voltage is too high 2. An external force is acting on the motor 3. Deceleration time too short 4. Braking module and resistor not installed	1. Ensure voltage is within acceptable range 2. Remove external force 3. Increase deceleration time 4. Install the braking module and braking resistor
Err07	Over-voltage during constant speed operation	1. Converter supply voltage is too high 2. An external force is acting on the motor	1. Ensure voltage is within acceptable range 2. Remove external force or install a braking resistor
Err08	Power supply fault	1. Deviation of input voltage parameters	1. Ensure voltage is within acceptable range
Err09	Under-voltage	1. Power outages 2. Deviation of input voltage parameters 3. Bus voltage anomaly 4. Incorrect operation of the rectifier bridge and buffer resistor 5. Incorrect operation of the power board 6. Incorrect operation of the control board	1. Reset the error 2, 3. Ensure voltage is within acceptable range 4. Replace the rectifier bridge and buffer resistor 5. Replace the power board 6. Replace the control board
Err10	Converter overload	1. Excessive load or motor blocking 2. Low converter power	1. Reduce the load and check the operating mode of the engine and equipment 2. Replace with a higher power converter model

Code	Error	Potential causes	Solutions
Err11	Motor overload	1. Incorrect settings FA-00 and FA-01 2. Excessive load or motor blocking 3. Low converter power	1. Set correct FA-00 and FA-01 values 2. Reduce the load and check the operating mode of the engine and equipment 3. Replace with a higher power converter model
Err12	Reserved		
Err13	Phase loss	1. Incorrect connection of converter and motor 2. Output voltage oscillation during engine operation 3. Incorrect operation of the power board 4. Incorrect operation of the IGBT module	1. Check the motor and motor cable 2. Make sure the motor windings are in order 3. Replace the power board 4. Replace IGBT module
Err14	IGBT overheat-ing	1. Ambient temperature too high 2. Air duct blocked 3. Cooling fan failure 4. Thermistor (temperature sensor) failure 5. The IGBT module failure	1. Reduce ambient temperature 2. Clean the air duct 3. Replace cooling fans 4. Replace the thermistor 5. Replace IGBT module
Err15	External alarm signal	MI terminal receives an external fault signal generated by an accessory device	Find out the source of the fault, correct it and reset the converter
Err16	Commu-nication system error	1. Master device error 2. Damaged data cable 3. Incorrect configuration of communication settings	1. Check master device 2. Check communication cables 3. Enter correct communication settings
Err17	DC contactor fault	1. Power board or power supply malfunction. 2. DC contactor malfunction.	1. Replace the power board or power supply 2. Replace the DC contactor.
Err18	Current mea-surement error	1. Incorrect operation of the Hall sensor 2. Incorrect operation of the power board	1. Check Hall sensor and connection 2. Replace the power board
Err19	Motor autocon-fig error	1. Incorrect motor settings 2. Autoconfig timeout	1. Configure motor settings according to motor nameplate 2. Check the cable connecting the converter to the motor
Err20	Reserved		
Err21	EEPROM read/write error	1. EEPROM chip failure	1. Replace the control board
Err22	Converter hardware failure	1. Overvoltage 2. Overcurrent	1. Remedy overvoltage 2. Remedy overcurrent

Code	Error	Potential causes	Solutions
Err23	Ground fault	1. Motor short to ground	1. Replace cable or motor
Err24 Err25	Reserved		
Err26	Total motor runtime error	1. Motor runtime has reached the setpoint	1. Clear the runtime value
Err27 Err28	Reserved		
Err29	Total time online error	1. The total converter online time has reached the setpoint	1. Clear the runtime value
Err30	Zero-load fault	1. The operating current of the converter is less than the value of FA-64	1. Check the load on the electric motor and settings FA-64 and FA-65
Err31	Loss of PID feedback during operation	1. PID feedback value is less than F9-26	1. Check the PID feedback signal or set F9-26 correctly
Err40	Current limit error	1. Excessive load or motor blocking 2. Low converter power.	1. Reduce the load and check the operating mode of the engine and equipment 2. Replace with a higher power converter model
Err41 Err42 Err43 Err45 Err51	Reserved		

10.2 Common errors. Troubleshooting

Error	Potential causes	Solution
No indication after power on	1. Input voltage is zero or too low. 2. The power supply has failed 3. The rectifier bridge has failed. 4. Buffer resistors are damaged. 5. The control board or control panel has failed. 6. Poor cable connection	1. Check input voltage. 2. Check bus voltage 3. Connect cables 4. Contact the service center.
HC error after power up	1. Poor connection between control board and power board. 2. The control board has failed. 3. Motor or output line ground fault. 4. Hall sensor damaged 5. Input voltage is too low.	1. Eliminate possible errors in sequence. 2. Contact the service center.
HC error after the converter starts running and immediately stops	1. Cooling fan has failed or the air duct is blocked. 2. Control cables short circuit	1. Check control cables using a megger. 2. Contact the service center.
Error code Err23 after power up	1. Motor or output line ground fault. 2. The converter has malfunctioned.	1. Check the motor and output line using a megger. 2. Contact the service center.
Constant Err14 message	1. Carrier frequency too high. 2. Cooling fan has failed or the air duct is blocked. 3. Converter's internal components have failed (e.g. thermocouple)	1. Reduce carrier frequency (F0-15). 2. Replace fans, clean out the air duct. 3. Contact the service center.
The motor does not run after the inverter starts	1. The motor or cables are damaged. 2. Incorrect settings of the converter (motor parameters). 3. Loose connection between power board and control board 4. The power board has failed	1. Make sure the inverter and motor are well connected. 2. Replace the electric motor or repair the equipment malfunction. 3. Check and reset settings.

Error	Potential causes	Solution
Digital input terminal MIn does not work	1. Incorrect settings. 2. Incorrect external signal. 3. Loose jumper between the PLC and +24V. 4. The control board has failed.	1. Check and reset group F5 settings. 2. Disconnect and reconnect external signal cables. 3. Reconnect the jumper between OP and +24V.
Overvoltage and overcurrent error codes constantly displayed	1. Incorrect motor parameters. 2. Incorrect acceleration/ deceleration timing. 3. Load fluctuations.	1. Reset the motor parameters or perform autoconfig of the parameters. 2. Set appropriate acceleration/ deceleration timings.
Error code Err17 is displayed after power up or during operation	1. AC contactor open.	1. Make sure the cables are connected properly. 2. Make sure the contactor is not damaged 3. Make sure that the +24V power supply to the contactor is not damaged.
Displays PPPPP after power on	1. Control board components have failed. 2. Loose contact between control board and power board	1. Replace the control board 2. Reconnect the control board and power board.

11 Maintenance

11.1 Routine inspection

Routine inspection and periodic maintenance are required to prevent excessive wear and tear on the converter's internal components and identify potential malfunctions caused by high ambient temperature, humidity, dust, or vibration. The frequency of routine inspection depends on the environmental conditions and should ensure maximum compliance with the requirements specified in Section 3.3.

What to look for during the routine inspection:

- Abnormal noises during converter operation;
- Vibration during electric motor operation;
- Changes in temperature, humidity and contamination of the converter surroundings;
- Condition and performance of converter cooling fans;
- Converter overheating;

A routine inspection includes:

- Cleanliness of the converter during operation. Dust and other contaminants are more actively attracted to the power components of the converter due to the presence of a powerful electrostatic field.
- The converter must be routinely cleaned to remove the dust buildup and prevent it from entering the converter housing.
- After cleaning and lubricating the cooling fans, make sure to excess grease.

11.2 Periodic maintenance

Periodic maintenance requires shutting down and disconnecting the converter. Maintenance cycle depends on general environmental conditions.

Periodic maintenance includes:

- Inspection and cleaning of ventilation ducts;
- Checking the tightness of screw connections;
- Inspecting the converter for signs of corrosion;
- Inspecting terminals for electric arc traces;
- Testing the insulation of the power supply circuit;

ATTENTION! When using a megger (1000 VDC megger is recommended) to measure the insulation resistance, the power supply circuit must be disconnected from the converter. Do not use an ohmmeter to test the insulation of control circuits. Do not perform a high voltage test as it is performed by the manufacturer.

11.3. Parts replacement

Wearing parts of the converter mainly include cooling fan and electrolytic capacitor, the service life of which depends on the operating environment and periodic maintenance.

How to determine the service life:

Replacement Part	Service life
Cooling fan	~3 years
Electrolytic capacitor	~5 years

You can determine the need for replacement based on total operating time.

- Cooling Fan. Possible cause of damage: bearing and blade wear. Replacement criteria: Cracks on the surface of the blade, abnormal vibration or noise during operation
- Electrolytic capacitor. Possible cause of damage: power supply instability, high ambient temperature, electrolyte aging. Replacement criteria: electrolyte leaks, safety valve blowout, static capacitance decrease, insulation resistance decrease.

11.4 Converter storage

When storing converter for an extended period of time:

- The converter must be stored in the original manufacturer's packaging.
- Long-term storage leads to deterioration of the electrolytic capacitor. Therefore, connect the the converter to the power supply at least once every 2 years for at least 5 hours. When powering up the inverter using the voltage regulator, gradually increase the input voltage to rated.

12 Recommended auxiliary equipment

12.1 Auxiliary electrical equipment selection

To select appropriate auxiliary equipment for your converter, please refer to Table 12-2.

12.2 Connecting auxiliary equipment

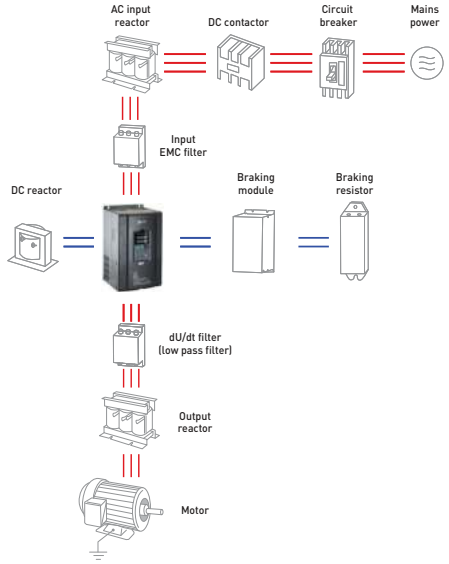

Fig. 11-1 Auxiliary equipment connection diagram

Do not install a capacitor or a surge suppressor at the output of the converter, this will cause the converter to fail or damage the capacitor and the surge suppressor.

For detailed information on auxiliary equipment and accessory selection, please refer to the Auxiliary equipment selection guide.

12.3 Auxiliary equipment info

Instructions are given in Table 12-1.

Table 12-1

Figure	Device	Description
	Cable	Signal transmission
	Circuit breaker	Shuts down power in the event of overload. Selection: size the circuit breaker 1.5 or 2 times larger than the rated current of the converter.
	AC input reactor	Improves input power factor; Efficiently eliminates high harmonics at the input to avoid damages to the equipment caused by voltage distortion. Eliminates phase imbalance caused by input current imbalance.
	Input EMC filter	Suppresses conducted interference and impulse noise of the converter. Suppresses conducted interference from the power source to the converter and ensures electromagnetic compatibility of the converter.
	Braking resistor	Absorbs the kinetic energy of the electric motor during rapid braking.
	dU/dt filter (low pass filter)	Decreases peak voltage and protects motor windings.
	Output reactor (sine filter)	- reduces heating of motor windings - long motor cable (up to 300 m) - reduces acoustic noise

13 Warranty and post-warranty obligations

This warranty applies only to the frequency converter.

- EKF provides a warranty of 36 months (from the date of shipment). After this period, the customer is liable for any maintenance costs.
- During the warranty period, maintenance costs will be charged to the customer under the following conditions:
  - Damages to the equipment caused by improper handling in violation of the operation manual.
  - Damages to the equipment caused by fire, flood, abnormal voltage, etc.
  - Damages caused by improper use of the equipment.

Maintenance costs will be charged according to the manufacturer's standard prices. If a service agreement exists between the parties, maintenance costs will be charged unde this agreement.

Table 12-2

Model	Rated current of circuit breaker (MCB, MCCB), A	EKF circuit breaker, item code	Recommended rated current of the contactor, A	Recommended EKF contactor, item code	Recommended power wire cross-section at the input, mm^2	Recommended power wire cross-section at the output, mm^2	Braking resistor resistance, Ohm	Brakingresistor power, W	Braking module available
VT100-0R4-1	16	mcb4763-1-16B-pro	9	ctr-s-9-220	2,5	2,5	200	80	no
VT100-0R4-1B	16	mcb4763-1-16B-pro	9	ctr-s-9-220	2,5	2,5	200	80	yes
VT100-0R7-1	25	mcb4763-1-25B-pro	16	ctr-s-18-220	2,5	2,5	150	80	no
VT100-0R7-1B	25	mcb4763-1-25B-pro	16	ctr-s-18-220	2,5	2,5	150	80	yes
VT100-1R5-1	32	mcb4763-1-32B-pro	25	ctr-s-25-220	2,5	2,5	100	100	no
VT100-1R5-1B	32	mcb4763-1-32B-pro	25	ctr-s-25-220	2,5	2,5	100	100	yes
VT100-2R2-1B	32	mcb4763-1-32B-pro	32	ctr-s-32-220	4,0	2,5	70	100	yes
VT100-0R7-3	16	mcb4763-3-16B-pro	9	ctr-s-9-380	2,5	2,5	300	150	no
VT100-0R7-3B	16	mcb4763-3-16B-pro	9	ctr-s-9-380	2,5	2,5	300	150	yes
VT100-1R5-3	16	mcb4763-3-16B-pro	9	ctr-s-9-380	2,5	2,5	220	260	no
VT100-1R5-3B	16	mcb4763-3-16B-pro	9	ctr-s-9-380	2,5	2,5	220	260	yes
VT100-2R2-3B	16	mcb4763-3-16B-pro	9	ctr-s-9-380	2,5	2,5	150	390	yes
VT100-4R0-3B	25	mcb4763-3-25B-pro	16	ctr-s-16-380	2,5	2,5	150	390	yes
VT100-5R5-3B	32	mcb4763-3-32B-pro	25	ctr-s-25-380	2,5	2,5	100	520	yes
VT100-7R5-3B	40	mccb99-100-40m	32	ctr-s-32-380	4,0	2,5	50	1040	yes
VT100-011-3B	63	mccb99-100-63m	40	ctr-s-40-380	4,0	4,0	50	1040	yes
VT100-015-3B	63	mccb99-100-63m	40	ctr-s-40-380	6,0	6,0	40	1560	yes
VT100-018-3B	100	mccb99-100-100m	63	ctr-s-65-380	6,0	6,0	20	6000	yes
VT100-022-3B	100	mccb99-100-100m	63	ctr-s-65-380	10.0	10.0	20	6000	yes
VT100-030-3B	125	mccb99-100-125m	100	ctr-b-115-380	16	10	20	6000	yes
VT100-037-3B	160	mccb99-250-160m	100	ctr-b-115-380	16	16	13,6	9600	yes
VT100-045-3	200	mccb99-250-200m	125	ctr-b-150-380	25	25	13,6	9600	no
VT100-055-3	200	mccb99-250-200m	125	ctr-b-150-380	35	35	13,6	9600	no
VT100-075-3	250	mccb99-250-250m	160	ctr-b-185-380	70	50	13,6	9600	no
VT100-090-3	250	mccb99-250-250m	160	ctr-b-185-380	50	50	13,6	9600	no
VT100-110-3	250	mccb99-250-250m	160	ctr-b-225-380	70	70	13,6	9600	no
VT100-132-3	350	mccb99-400-400	350	ctr-b-330-380	120	120	4	30000	no
VT100-160-3	400	mccb99-400-400m	400	ctr-b-400-380	150	150	4	30000	no
VT100-185-3	500	mccb99-400-400m	400	ctr-b-400-380	185	185	3	40000	no
VT100-200-3	600	mccb99-800-630m	600	ctr-b-630-380	150x2	150x2	3	40000	no
VT100-220-3	600	mccb99-800-630m	600	ctr-b-630-380	150x2	150x2	3	40000	no
VT100-250-3	600	mccb99-800-630m	600	ctr-b-630-380	150x2	150x2	2	60000	no
VT100-280-3	800	mccb99-800-800m	600	ctr-b-630-380	185x2	185x2	2	60000	no
VT100-315-3	800	mccb99-800-800m	800	pm12-800/380	185x2	185x2	2	60000	no
VT100-355-3	800	mccb99-800-800m	800	pm12-800/380	150x3	150x3	3	40000	no
VT100-400-3	800	mccb99-800-800m	800	pm12-800/380	150x3	150x3	3	40000	no
VT100-450-3	1200	mccb99-1250-1250me	1200	–	180x4	180x4	2,5x2	45000x2	no
VT100-500-3	1200	mccb99-1250-1250me	1200	–	180x4	180x4	2x2	60000x2	no
VT100-560-3	1200	mccb99-1250-1250me	1200	–	180x4	180x4	2x2	60000x2	no
VT100-630-3	1500	mccb99C-1250-1600	1500	–	180x4	180x4	2x3	60000x3	no

v3

ekfgroup.com