EKF

TECHNICAL MANUAL

Astro digital timer TM-AS EKF

1 DESCRIPTION

Astro digital timer TM-AS EKF is designed for automatic switching of lighting or other electrical circuits at the time of sunset and sunrise, based on the programmed geographical location, without the use of luminance sensors.

The timer complies with IEC 60947-1 and IEC 60947-5-1.

2 TECHNICAL DATA

Table 1

Characteristics		**Values**	
Item code		**tm-as**	**tm-as-1**
Rated supply voltage Un, V		AC/DC 24-264	AC 220-230
Rated frequency, Hz		50 / 60	
Insulation voltage Ui, V		250	
Maximum switching current, A	at power factor = 1	16	
	at power factor = 0,7	10	
Maximum number of scenarios		80	52
Utilization category		AC1	
Type and number of contacts		2 C/O	1 C/O
Maximum switching power		4000 VA/AC1; 384 W/DC	
Max. time error, sec./day		±1	
Min. battery life, years		10	
Max. power consumption, VA		2	1
Electrical life, cycles		100 000	
Mechanical life, cycles		1 000 000	
Max. cross-section of connected wires, mm^2		4	

Table 1 continued

Characteristics	Values	
Item code	**tm-as**	**tm-as-1**
Tightening torque, N·m	0,5	
Degree of protection	IP20	
Max weight, g	200	
Operating temperature, °C	-20 to 55	
Max. altitude above sea level, m	2000	
Max. relative humidity at 40°C (non-condensing)	50%	
Pollution degree	3	
Position in space	Arbitrary	
Mounting	35 mm DIN rail	

The product must be operated under the following environmental conditions:

- Non-explosive environment;
- No corrosive gases and vapors in concentrations damaging to metals and insulation;
- No saturation with current-conducting dust and vapors;
- No direct UV exposure;

The product housing is made of flame retardant ABS plastic.

The front panel features buttons for built-in clock and timer setup, backlit LED display, and a transparent cover that can be sealed to prevent access to the buttons.

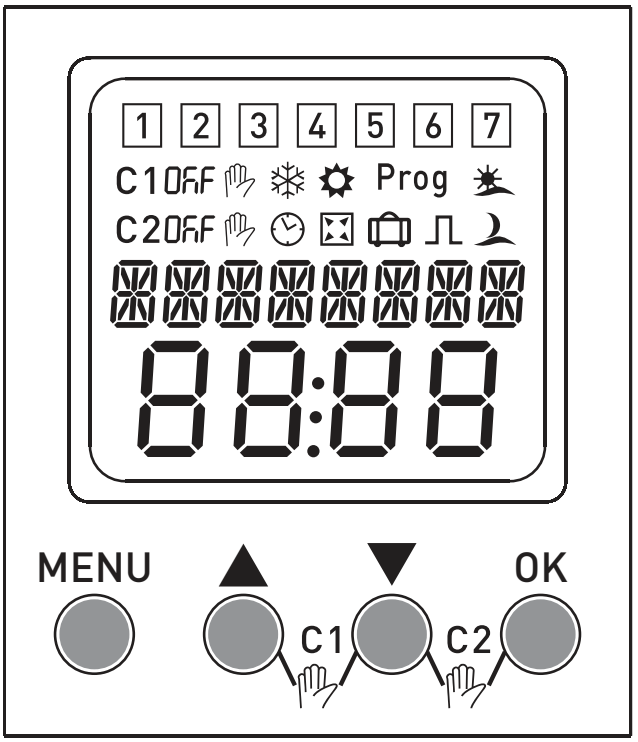

Fig. 1 - Device front panel

Display symbols:

1 2 3 4 5 6 7 – Days of the week: Monday... Sunday

- **C1** Channel 1 setup
- **C2** Channel 2 setup
- On OFF Contact position
- Automatic mode
- Manual mode
- Holiday mode
- Fall back
- Spring forward
- Prog Program configuration
- Random mode
- Sunrise
- Sunset

Functions of control buttons:

Table 2

MENU	• Enter menu • Return to main menu	OK	• Confirm selection
▲	• Browse menu • Increase value	▼	• Browse menu • Decrease value
▲ ▼ K1	• Manual control	▼ ok K2	• Manual control

A built-in lithium battery ensures that the timer will keep its settings for 10 years in the event of power failure.

The microprocessor enables execution of up to 80 control scenarios over two independent channels (for dual channel model). In this mode, the timer will switch according to the selected scenario.

If necessary, the timer can be put to the holiday mode, suspending the execution of the configured scenario. In holiday mode, the configured scenario will be saved, and the changeover contacts will remain in their initial state: 15-16, 25-26 – closed; 15-18, 25-28 – open.

The timer also has a manual mode in which the output state of the contacts is controlled directly by the user.

In random mode the timer will randomly switch the controlled circuit with the delay of 1 to 30 minutes.

3 INSTALLATION AND OPERATION

The device is installed in the distribution enclosure onto a 35 mm DIN rail.

To avoid interference, false tripping, or malfunctioning of the device, do not route its power supply wires along the power circuit wiring. If necessary, use a shielded cable.
Screw terminals support copper and aluminium wires with max. cross-section of 4 mm^2. Before connecting stranded conductors, terminate them with a ferrule or a sleeve using an appropriate tool.
Built-in lithium battery will fully charge within 24 hours from powering the timer.
The normally open output contacts of the timer (18, 28 - normally open; 16, 26 - normally closed; 15, 25 - common) are connected to the break in the phase wire of the power supply for the two load groups or in the break in the power supply wire of the control device, like a contactor coil.

3.1 SETUP AND PROGRAMMING

Initial settings:

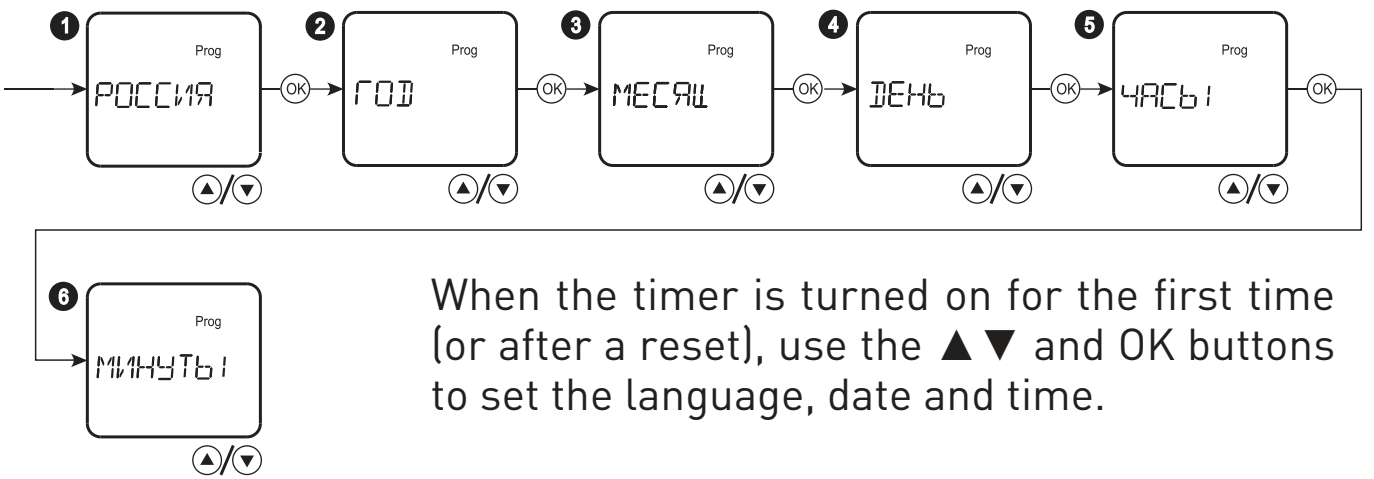

When the timer is turned on for the first time (or after a reset), use the ▲▼ and OK buttons to set the language, date and time.

Main Menu:

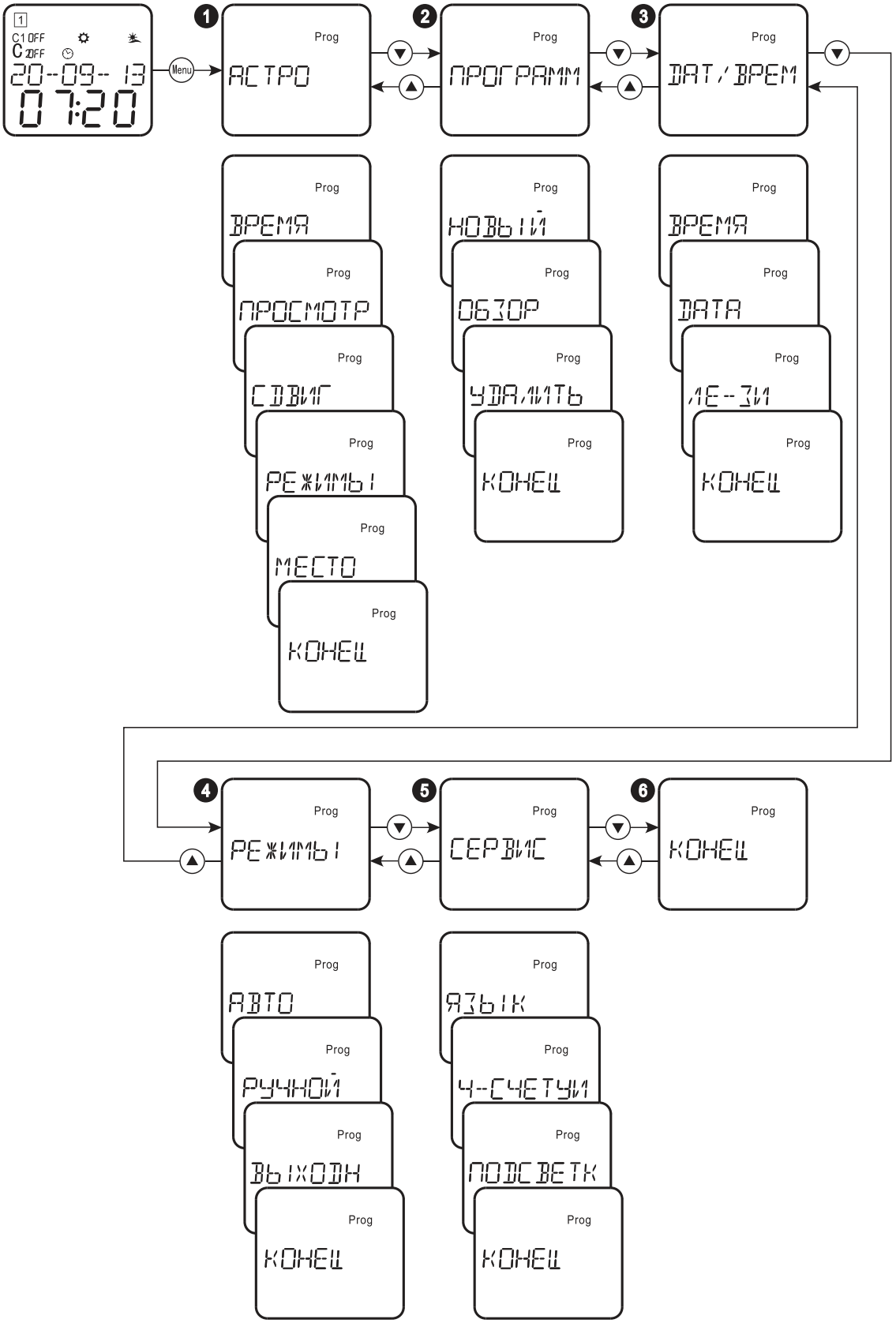
1
C1 OFF
C2 OFF
20--09-- 13
07:20
Menu
1
Prog
АСТРО
2
Prog
ПРОГРАММ
3
Prog
ДАТ/ВРЕМ
Prog
ВРЕМЯ
Prog
ПРОСМОТР
Prog
СДВИГ
Prog
РЕЖИМЫ
Prog
МЕСТО
Prog
КОНЕЦ
Prog
НОВЫЙ
Prog
ОБЗОР
Prog
УДАЛИТЬ
Prog
КОНЕЦ
Prog
ВРЕМЯ
Prog
ДАТА
Prog
ЛЕ-ЗИ
Prog
КОНЕЦ
4
Prog
РЕЖИМЫ
5
Prog
СЕРВИС
6
Prog
КОНЕЦ
Prog
АВТО
Prog
РУЧНОЙ
Prog
ВЫХОДИ
Prog
КОНЕЦ
Prog
ЯЗЫК
Prog
Ч-СЧЕТУИ
Prog
ПОДСВЕТК
Prog
КОНЕЦ

Table 3

❶	ASTRO	Astronomic settings
❷	PROGRAMM	Programming mode
❸	TIME/DATE	Date and Time settings
❹	MODE	Mode settings
❺	SERVICE	Other settings
❻	END	End settings process and exit from the menu

Press the MENU button to enter the main menu. Use the ▲▼ buttons to choose the menu item. The timer will automatically exit the menu after one minute of inactivity.

Astronomical settings:

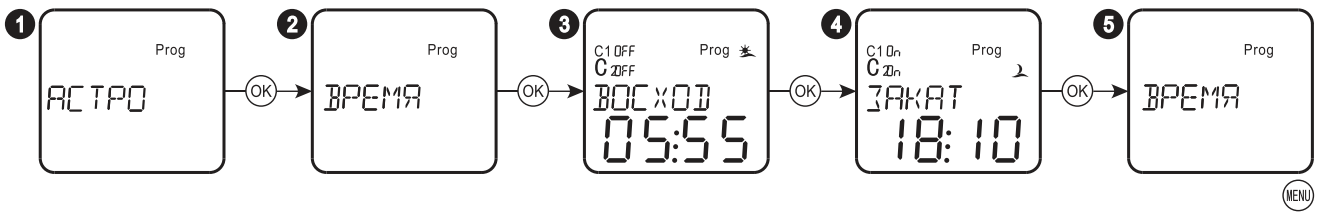

Viewing sunrise/sunset time:

Select the ASTRO mode, and press the OK button. Then select the TIME menu item, and press the OK button. View the sunrise/sunset time by pressing the OK button. Press the MENU button to return to the main menu.

Viewing astronomic time on a specific day:

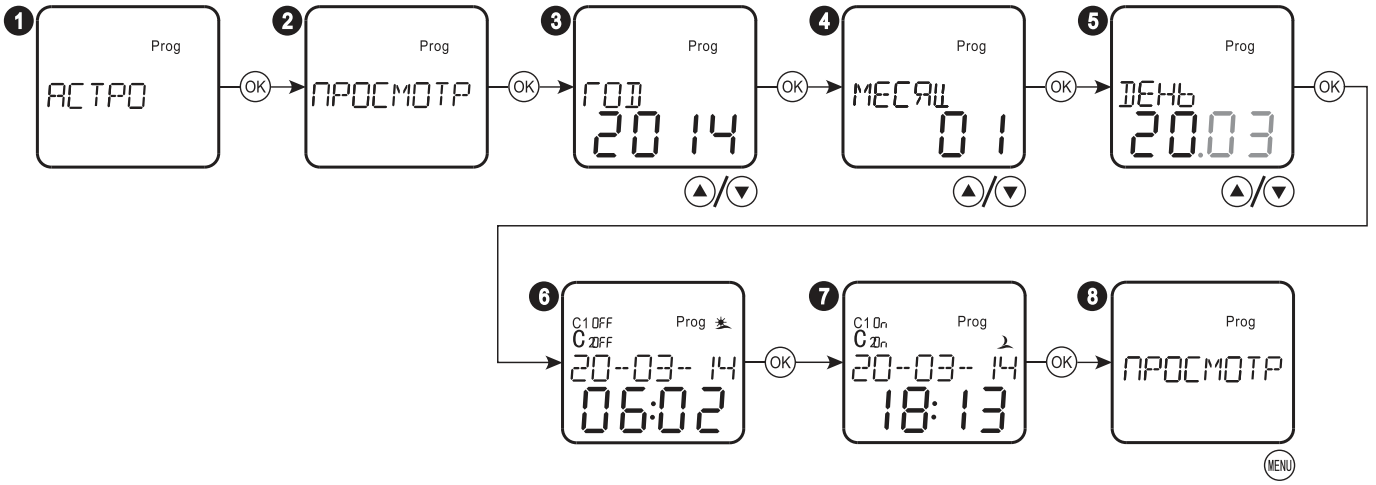

Select the ASTRO mode, and press the OK button. Select the VIEW menu item, and press the OK button. Use the ▲▼ buttons to select the year, and press the OK button. Select the month and the day as above. By pressing and holding the ▲▼ buttons you can change the values quicker. Press the OK button to view the sunrise/sunset time on a selected date. Press the MENU button to return to the main menu.

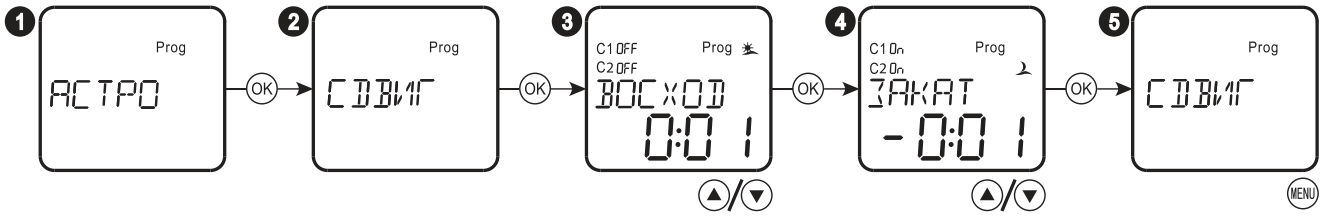

Select the ASTRO mode, and press the OK button.
Select the OFFSET menu item, and press OK. Use the ▲▼ buttons to select the sunrise offset, and press OK. Repeat for sunset offset. By pressing and holding the ▲▼ buttons you can change the values quicker. Maximum offset is ±2 hours. Press the MENU button to return to the main menu.

Setting up astronomic mode:

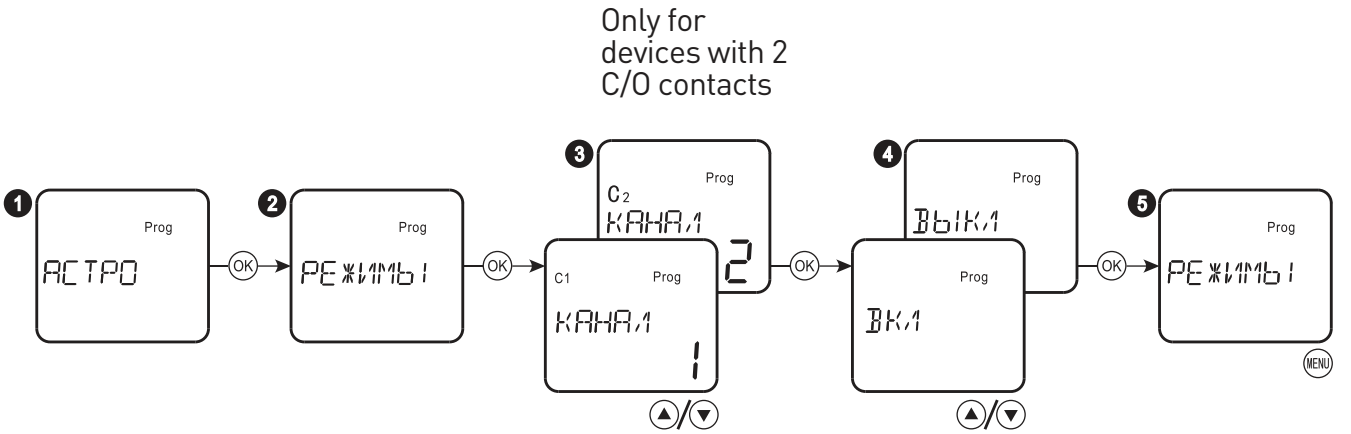

Select the ASTRO mode, and press the OK button. Select the MODE menu item, and press OK. Select channel 1 or 2 with the ▲▼ buttons, and press OK. Press the MENU button to return to the main menu.

Setting up geopraphical location:

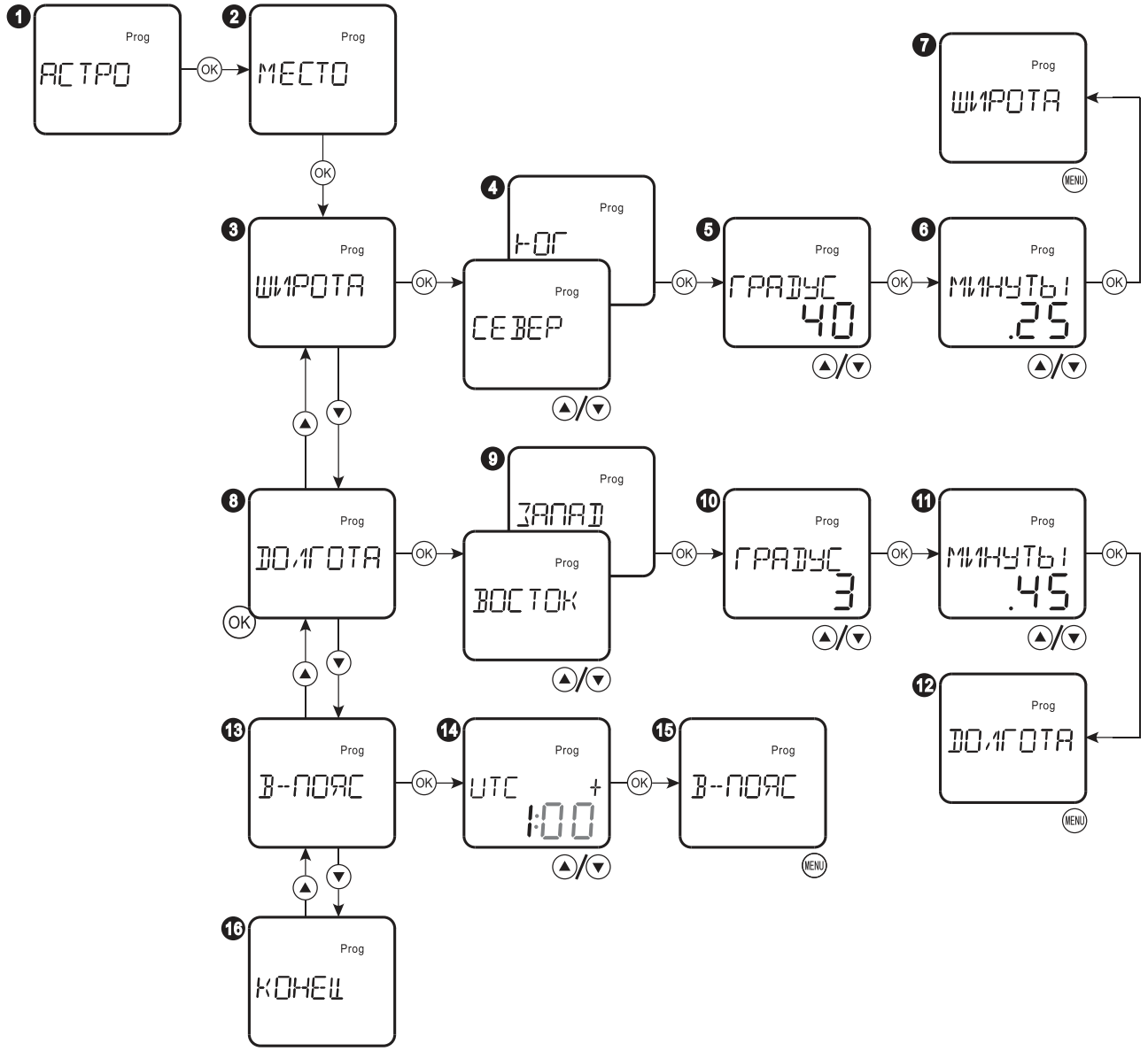

Select the ASTRO mode, and press OK. Select the LOCATION menu item, and press OK. To set up the latitude, select the LATITUDE menu item, and press OK. Select the south or north direction from the equator, then use the ▲▼ buttons to select the degrees and minutes. Press OK to confirm. To set up the longitude, repeat the steps above selecting the LONGITUDE menu item. To set up the zone, select the TIME ZONE menu item, and select the appropriate UTC offset. Press the MENU button to return to the main menu.

Time zone of Russia and the CIS

The numbers indicate the UTC offset

Table 4

City	Latitude, degrees N.	Longitude, degrees E.	City	Latitude, degrees N.	Longitude, degrees E.
Arkhangelsk	65	41	Novokuznetsk	54	87
Astrakhan	46	48	Novosibirsk	55	83
Barnaul	53	83	Omsk	55	73
Belgorod	51	37	Orenburg	52	55
Blagoveshchensk	50	128	Penza	53	45
Bryansk	53	34	Perm	58	56
Vladivostok	43	132	Petropavlovsk-Kamchatsky	53	159
Vladimir	56	40	Rostov-on-Don	47	40

Table 4 continued

City	Latitude, degrees N.	Longitude, degrees E.	City	Latitude, degrees N.	Longitude, degrees E.
Volgograd	49	44	Ryazan	55	40
Voronezh	52	39	Samara	53	50
Yekaterinburg	57	61	St. Petersburg	60	30
Ivanovo	57	41	Saratov	52	46
Izhevsk	57	53	Severo-Kurilsk	51	156
Irkutsk	52	104	Sochi	44	40
Kazan	56	49	Stavropol	45	42
Kaliningrad	55	21	Tver	57	36
Kaluga	55	36	Tolyatti	53	49
Kemerovo	55	86	Tomsk	56	85
Kirov	59	50	Tula	54	38
Krasnodar	45	39	Tyumen	57	66
Krasnoyarsk	56	93	Ulan-Ude	52	108
Kursk	52	36	Ulyanovsk	54	48
Lipetsk	53	40	Ufa	55	56
Magadan	60	151	Khabarovsk	48	135
Magnitogorsk	53	59	Cheboksary	56	47
Makhachkala	43	47	Chelyabinsk	55	61
Moscow	56	38	Chita	52	114
Naberezhnie Chelny	56	52	Yuzno-Sakhalinsk	47	143
Nizhniy Novgorod	56	44	Yakutsk	62	130
Nizhny Tagil	58	60	Yaroslavl	58	40

Setting up the clock:

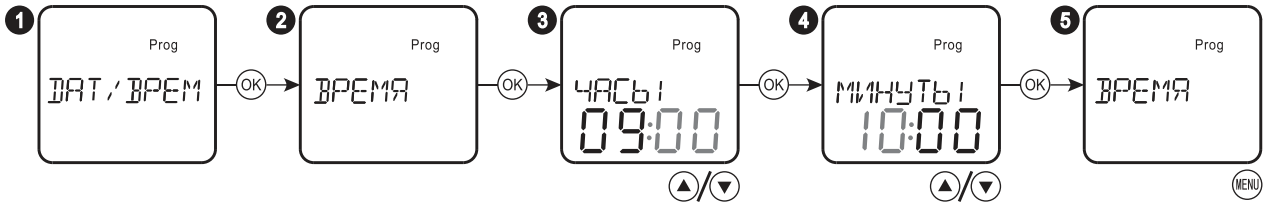

Select the DATE/TIME menu item, and press the OK button. Select the TIME menu item, and press the OK button. Use the ▲▼ buttons to set up the hour and minute, and press the OK button to confirm. By pressing and holding the ▲▼ buttons you can change the values quicker. Press MENU to exit from the settings.

Setting up the current date:

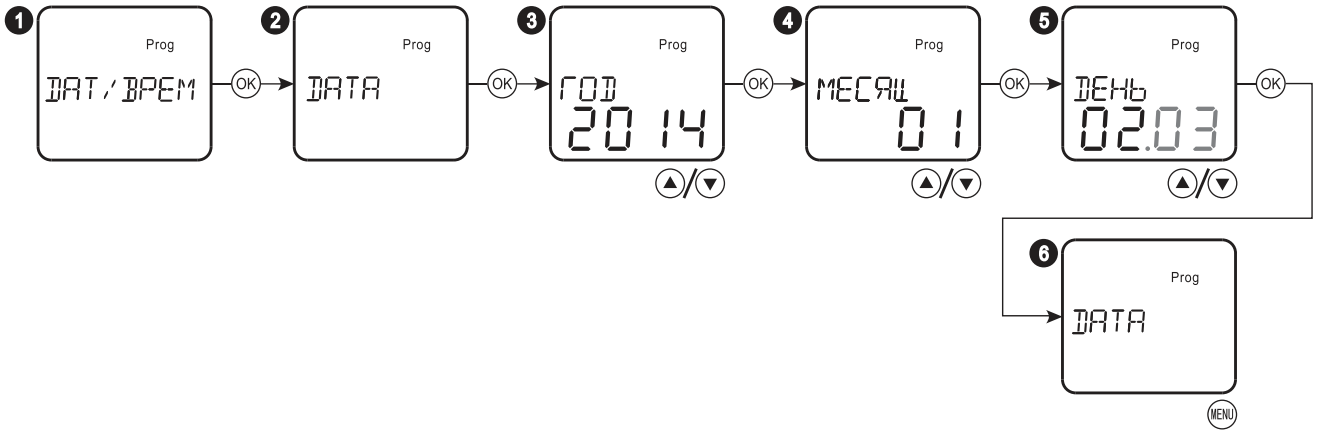

Select the DATE/TIME menu item, and press the OK button. Select the TIME menu item, and press the OK button. Use the ▲▼ buttons to set up the year, month, and day, and press OK to confirm. By pressing and holding the ▲▼ buttons you can change the values quicker. Press MENU to exit from the settings.

Setting up the daylight saving time:

Select the menu item DATE/TIME, and press the OK button.

Display	Spring forward	Fall back
DST EUR	Last Sunday of March	Last Sunday of October
DST USA	Second Sunday of March	First Sunday of November
PROGRAMM	Programmable	Programmable
OFF	N/A	N/A

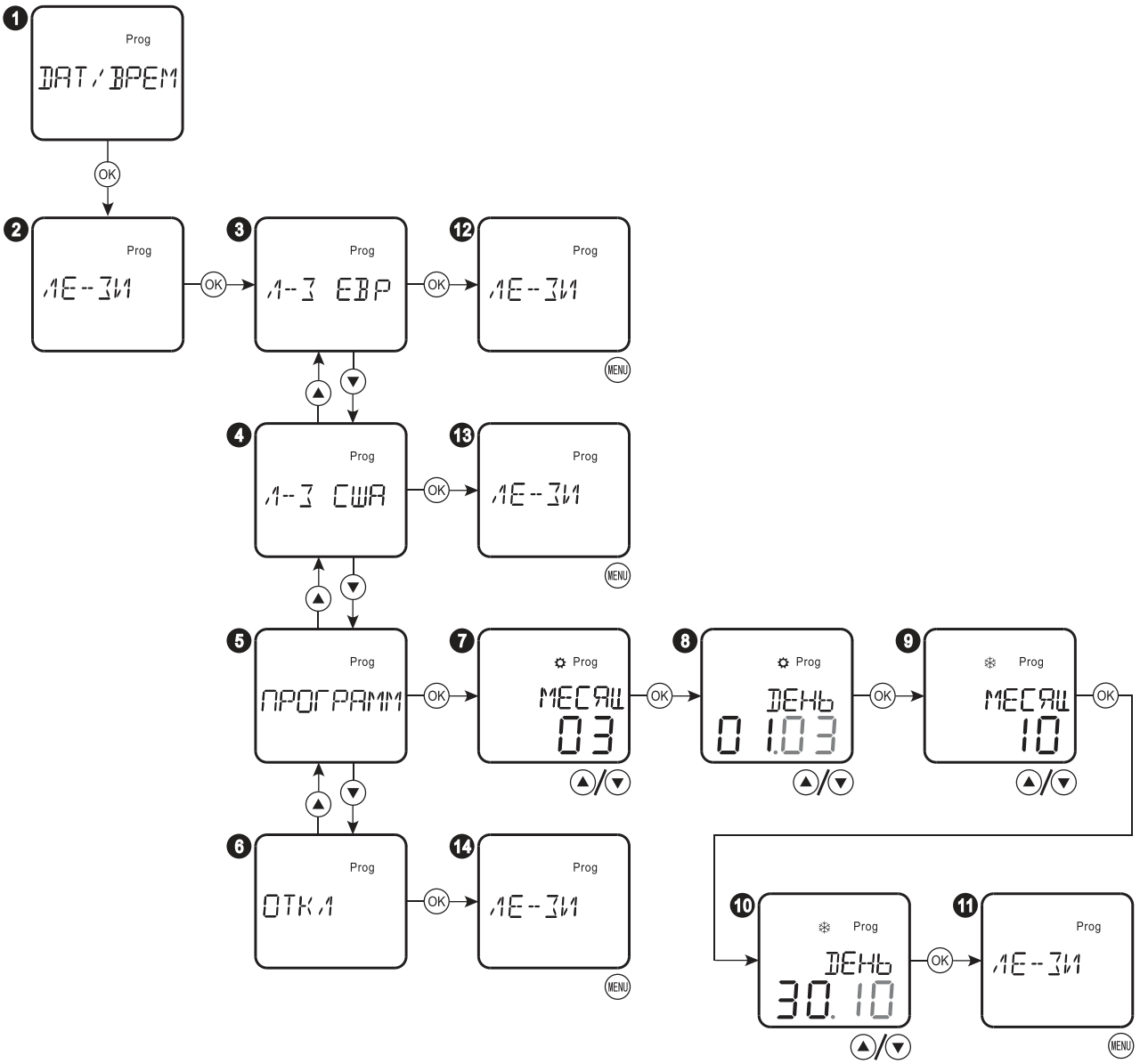

Select the item DST menu item, and press the OK button. Select the appropriate DST using the table above for reference.
Press MENU to exit from the settings.

Setting up a new scenario:

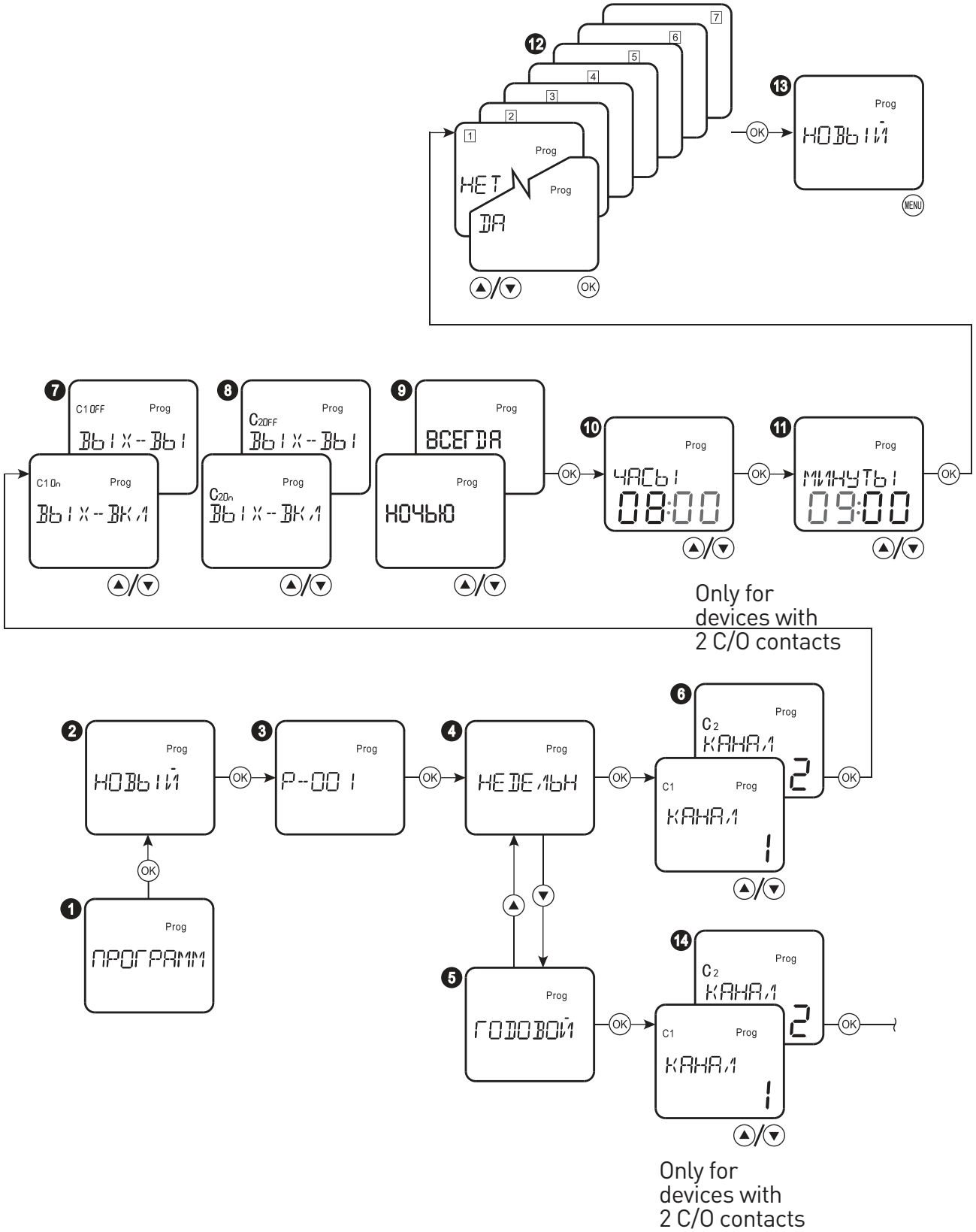

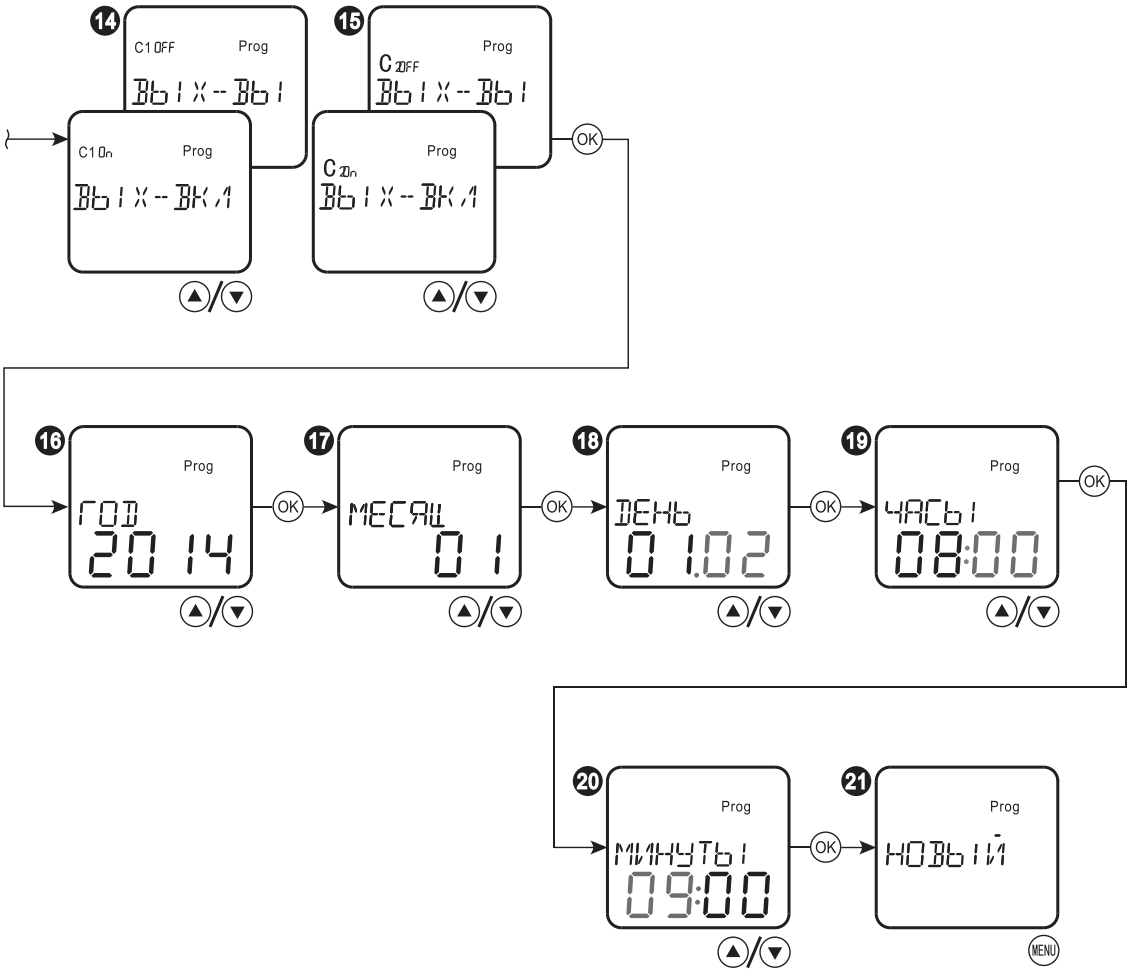

Select the PROGRAM menu item, and press the OK button. Select NEW menu item, and press the OK button. The display will show the number of the scenario. If the memory of the timer is full, a new scenario will not be created and the display will show the FULL message. Select WEEK for weekly or YEAR for yearly operating cycle. Select the position of the output contacts. Then, select either the NIGHT operation mode (the relay will be activated only when the ON/OFF time is between the time of sunset and sunrise, accounting for offsets) or ALWAYS. Set the hours and minutes for the weekly cycle; Set the year, month, day, and time for the yearly cycle for each channel. Press the OK button to confirm. If an extra step is required, press the OK button and repeat the setting steps. Press the MENU button to finish the setting process.

Changing the existing scenario:

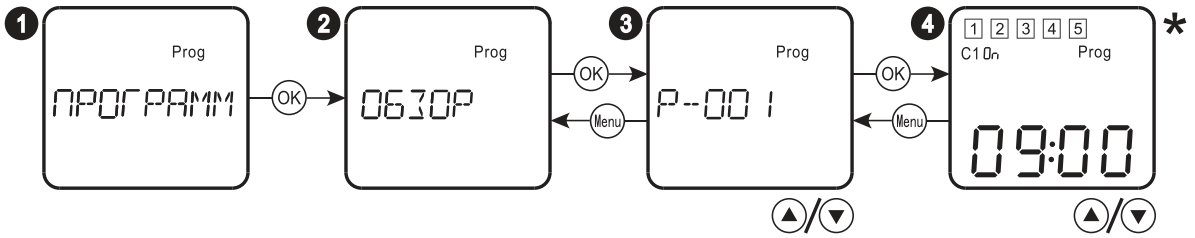

Select the PROGRAM menu item, and press the OK button. Select the VIEW menu item, select the program and press the OK button, repeat the actions described in the “Setting up a new scenario” section.

Deleting a sceanrio:

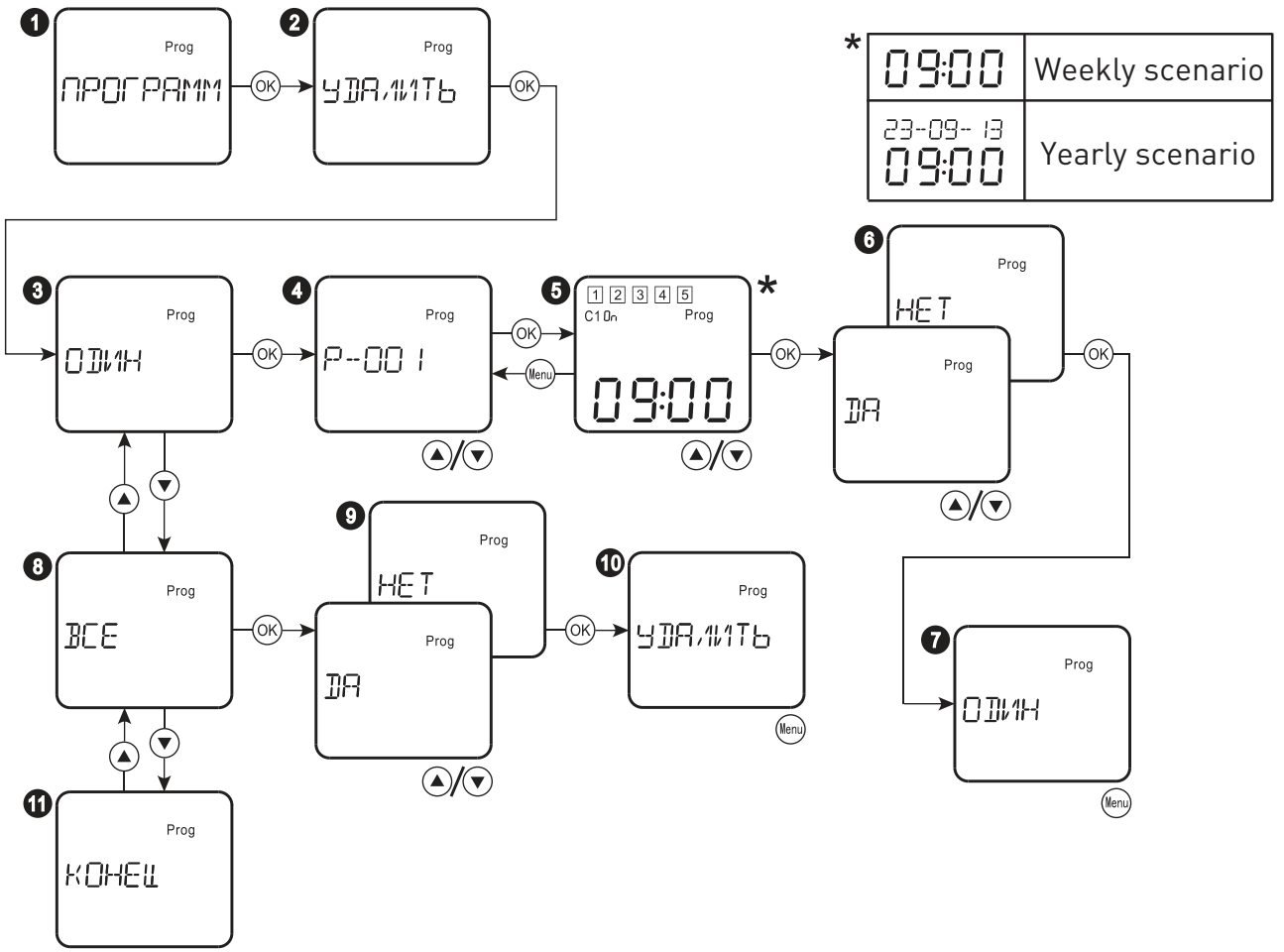

Select the PROGRAM menu item, and press the OK button. Select the DELETE menu item, and press the OK button. If you want to delete a single scenario, select the ONE menu item, navigate to the required scenario number with the ▲▼ buttons and press the OK button. If you want to delete all existing scenarios, select the ALL menu item, and press the OK button to clear the memory.

Viewing the existing scenarios:

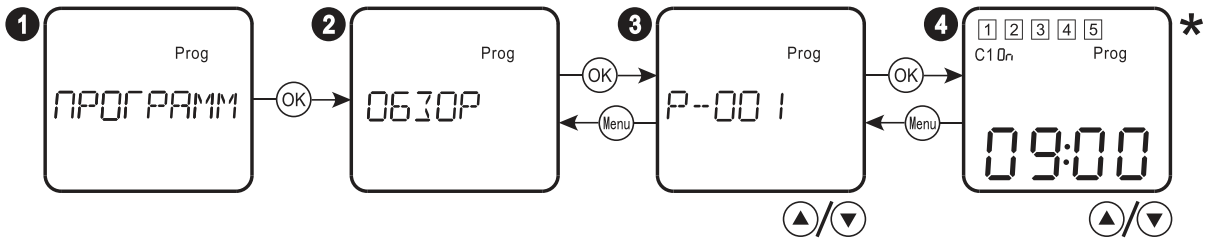

Select the PROGRAM menu item, and press the OK button. Select the VIEW menu item, and press the OK button. Use the ▲▼ buttons to browse the all scenarios.

Setting up random mode:

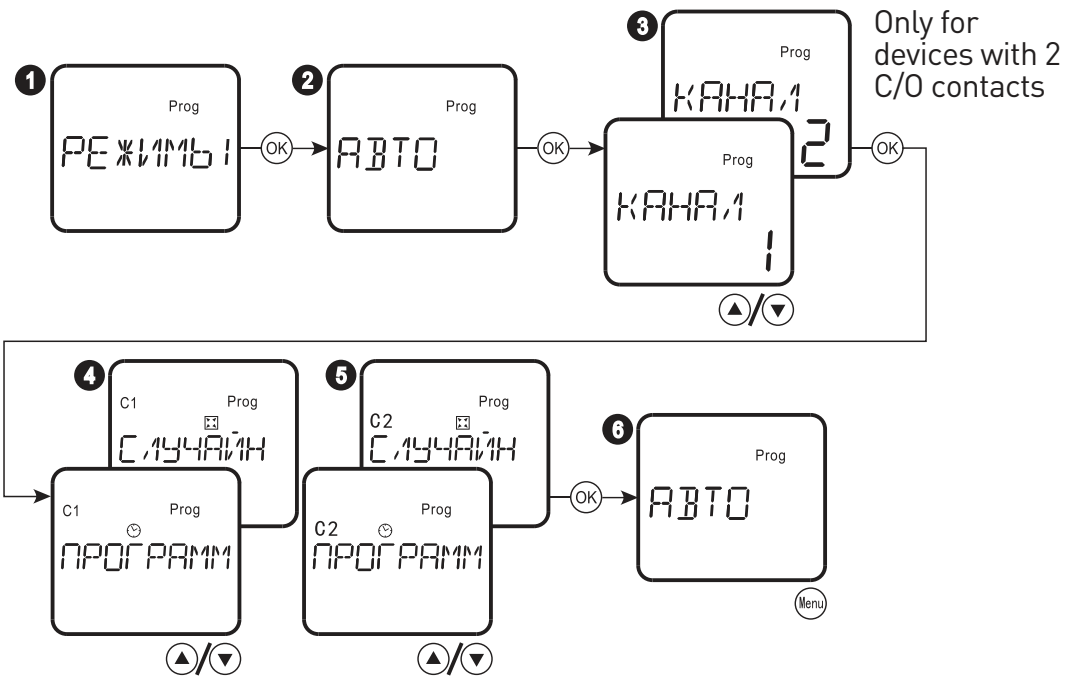

Select the MODE menu item, and press the OK button.

Select the AUTO menu item, and press the OK button. Select the channel and then select the operating mode: AUTO as per set scenario, or RANDOM – random activation of the timer within the 1 to 30 minutes range. Press the MENU button to finish the setting process.

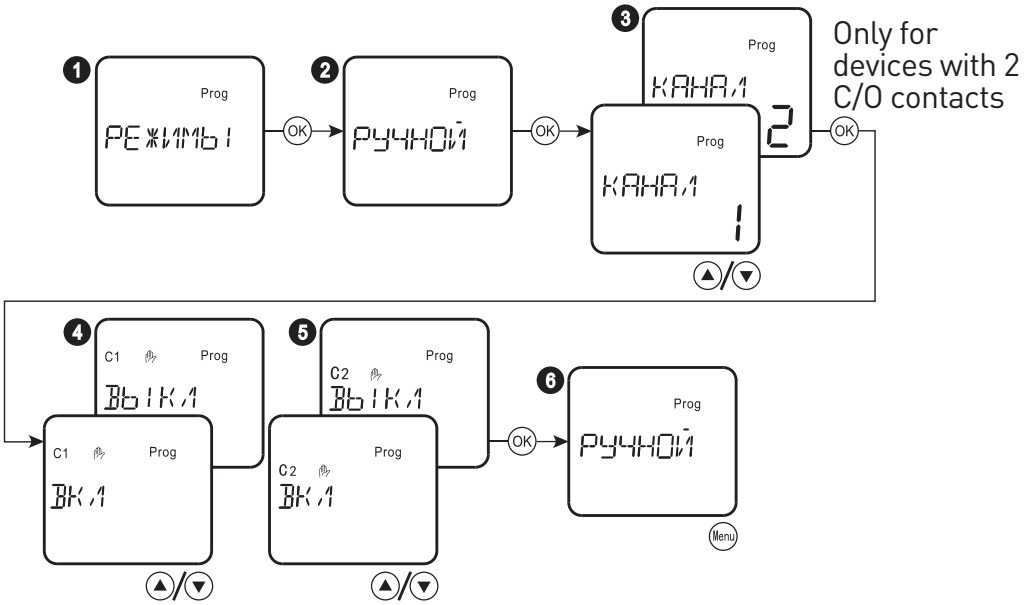

Manual mode:

Select the MODE menu item, and press the OK button. Select the MANUAL menu item, and press the OK button. Select the channel and set the position of the contacts to ON or OFF. Press the MENU button to finish the setting process.

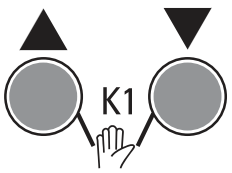

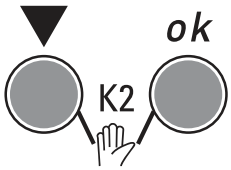

Manual control

When the ▲▼ buttons are pressed at the same time, the output contacts 18-15 of the C1 channel are switched to always closed. When the ▲▼ buttons are pressed at the same time again, the timer reverts to automatic mode.

Similarly (for timer with 2 C/O contacts), when the ▲▼ and OK buttons are pressed at the same time, the output contacts 28-25 of the C2 channel are switched to always closed. When the ▼ and OK buttons are pressed at the same time again, the relay reverts to automatic mode.

Setting up holiday mode:

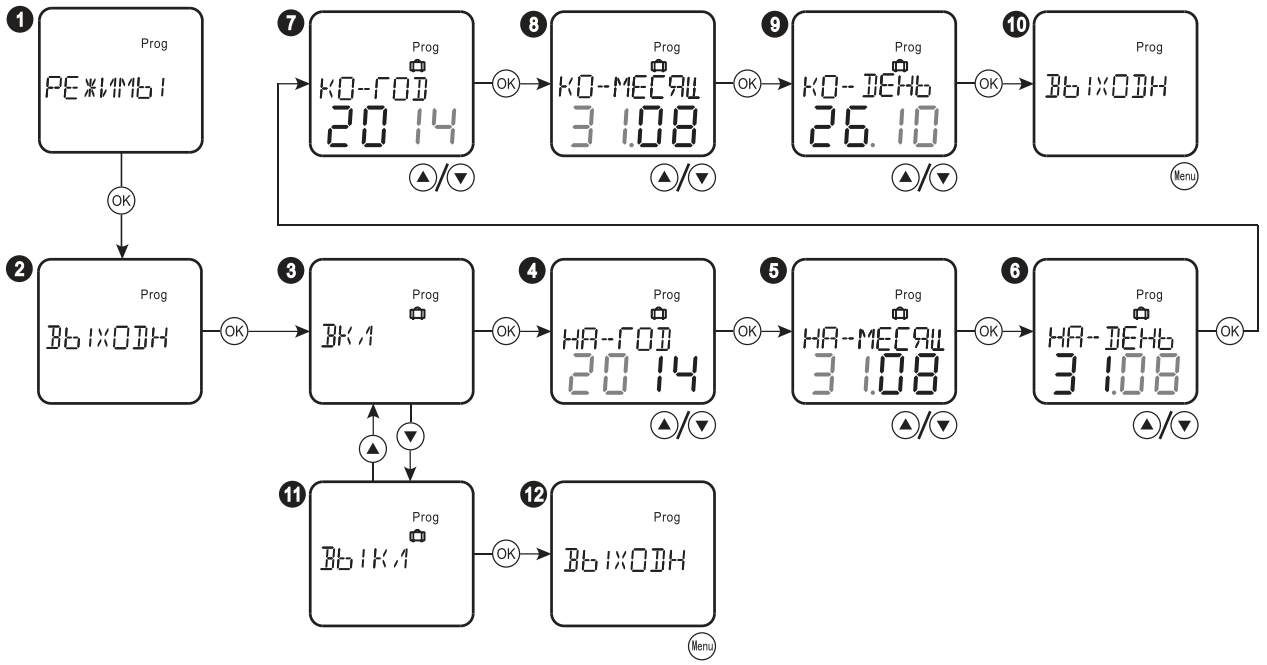

Select the MODE menu item, and press the OK button. Select the HOLIDAY menu item, and press the OK button. Select the ON menu item to activate the holiday mode, and press the OK button to confirm your selection. Set the year, month and day of activating and deactivating the holiday mode. To deactivate the HOLIDAY mode, select the OFF menu item and press the OK button.

Language selection:

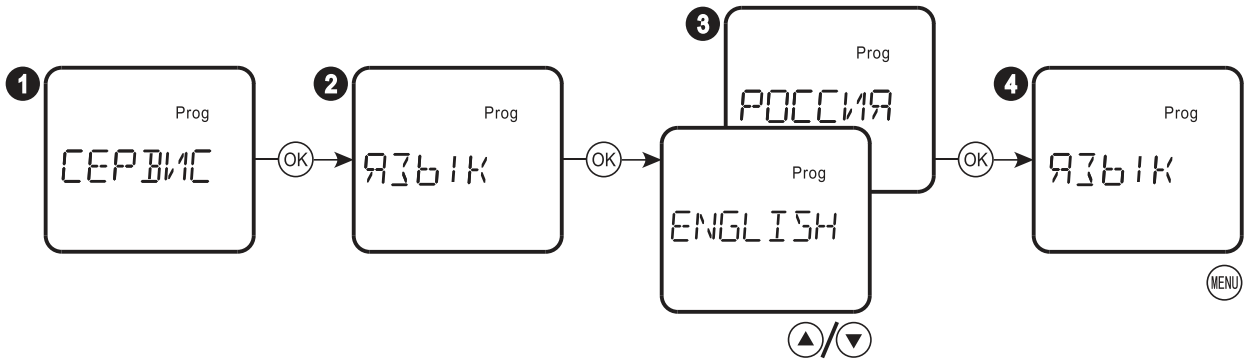

Operating hours:

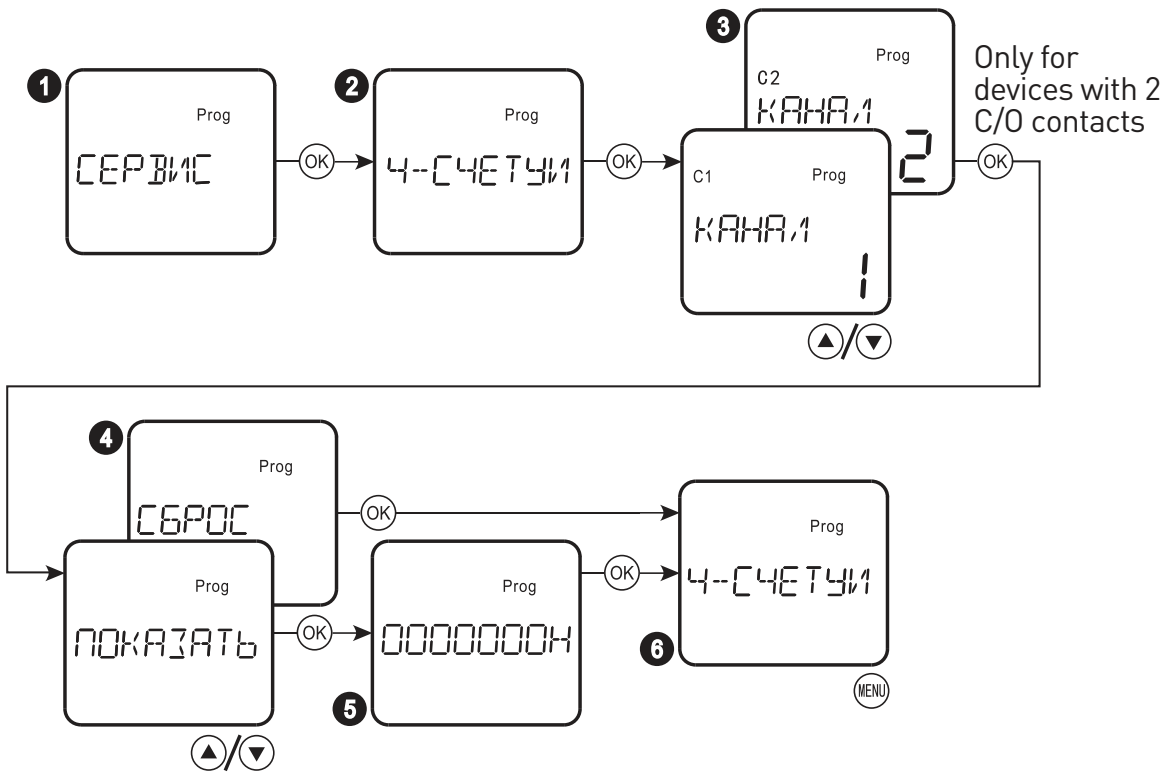

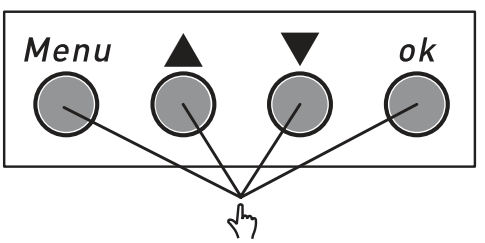

Select the SERVICE menu item, and press the OK button. Select the HR-COUNT, and press the OK button. Select the channel, then select the SHOW menu item to display the number of hours of operation in the contacts ON position. Select the CLEAR menu item to reset the operating time. Press the MENU button to exit the menu.

Select the SERVICE menu item, and press the OK button. Select the BACKLIT menu item, and press the OK button. Select ON to keep the display constantly lit or 2 MIN for a two-minute timeout. Press the MENU button to exit the menu.

Factory reset:

Press and hold the MENU, ▲▼ and OK buttons for 3 seconds to reset the timer to factory settings.

The timer does not require any specific maintenance. Tighten the screw terminals of the timer every 6 months.

4 WIRING DIAGRAM

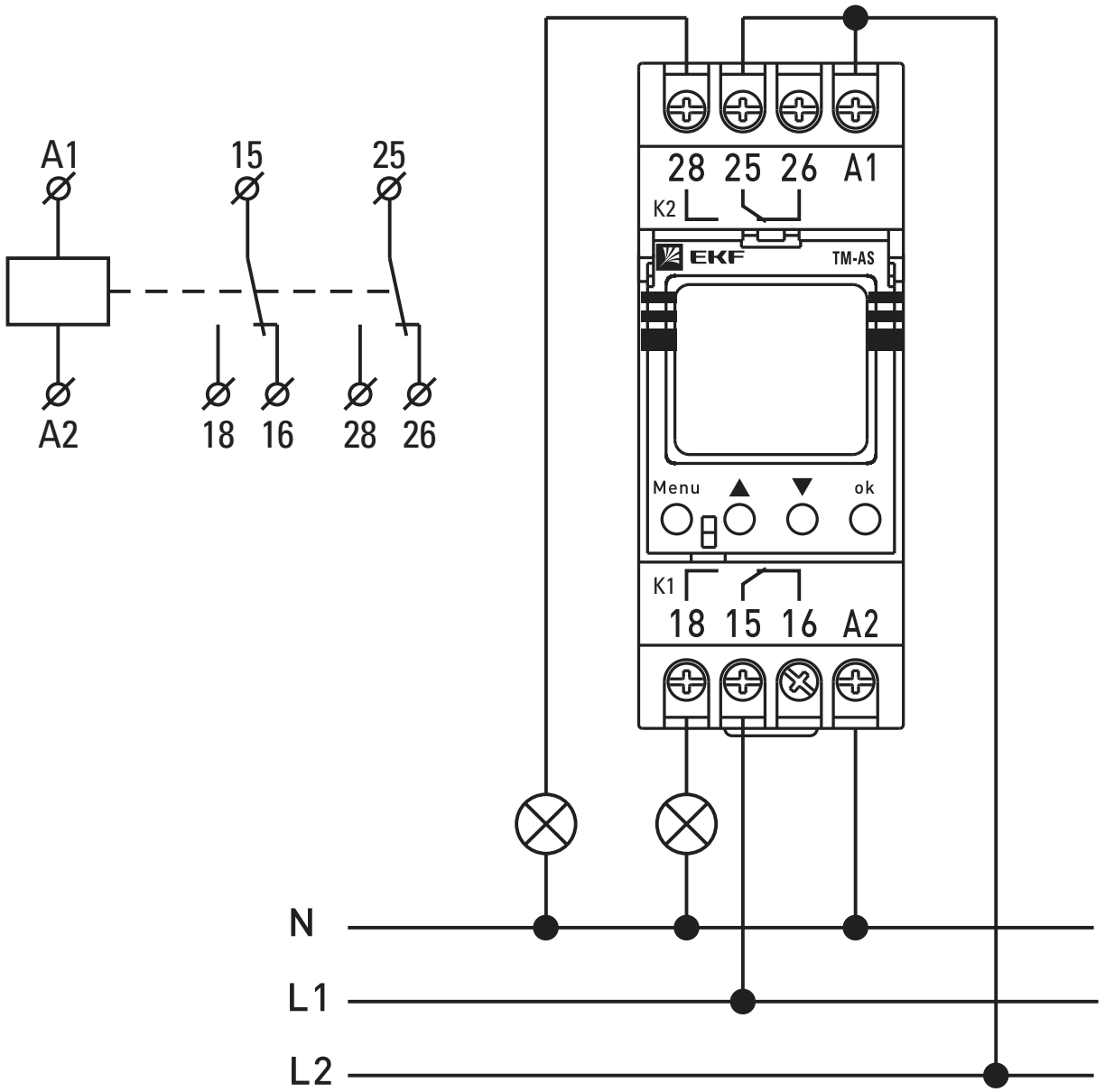

Fig. 4 - Wiring diagram

5 OVERALL AND INSTALLATION DIMENSIONS

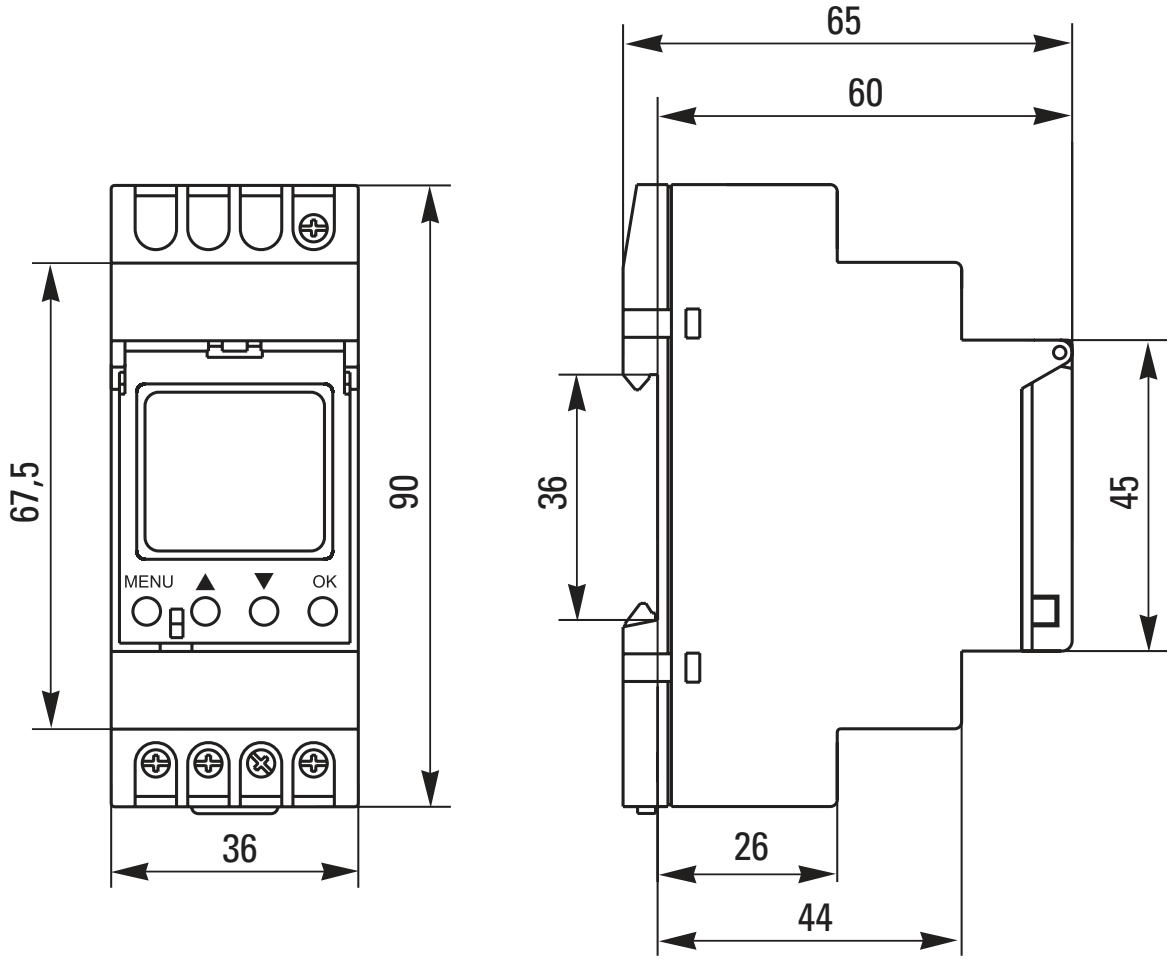

Fig. 5 - Overall and installation dimensions

6 DELIVERY SCOPE

The timers are supplied in a group package. For all available documentation, scan the QR-code on the insert or on the inside of the package.

7 SAFETY REQUIREMENTS

WARNING! Hazardous voltage.
The device conforms to IEC 61140 Class 0 for protection against electrical shock.
The device must be installed and serviced by qualified electrical personnel only.
Do not operate timers with visible mechanical damage.
For maintenance of timers, follow national safety rules for operation of electrical Installations.
Do not operate timers with damaged housing.
Failure to comply with the instructions may lead to product malfunction, electrical shock or fire.

8 TRANSPORTATION AND STORAGE

Timers can be transported by any means of enclosed transport that protects the packaged goods from mechanical impact and weather exposure.
Timers shall be stored in the original package indoors at the ambient temperature from -40 °C to 70 °C and relative humidity of max. 90% at 25°C.

9 DISPOSAL

Life-expired and failed timers shall be disposed of in compliance with the effective national and local laws and regulations.To dispose of the product, send it to an authorized company for recycling in compliance with the effective national and local laws and regulations.

10 MANUFACTURER'S WARRANTY

The manufacturer guarantees the timers comply with the declared characteristics, provided that the consumer follows the operation, transportation and storage conditions.

Warranty period: 7 years from the date of sale specified in the sales receipt.

Shelf life: 7 years from the date of manufacture specified on the product packaging or housing.

Service life: 10 years.

Manufacturer: OOO Electroresheniya, Otradnaya st., 2b/9, 127273, Moscow, Russia, tel. +7 (495) 788-88-15.

MEA regional headquarters: EKF ELECTRICAL SOLUTION – FZCO, Dubai Silicon Oasis, DDP, Building A2, Dubai, United Arab Emirates.

Importer and EKF trademark service representative in the territory of the Republic of Kazakhstan:
TOO «Energoresheniya Kazakhstan», Kazakhstan, Almaty, Bostandyk district, Turgut Ozal st., 247, apt 4.

11 CERTIFICATE OF ACCEPTANCE

Timers TM-AS EKF have been manufactured in compliance with laws and regulations in force and have been approved for operation.

Date of manufacture: for information, refer to the product housing or package.

Quality control stamp

v3

ekfgroup.com

EKF