EKF

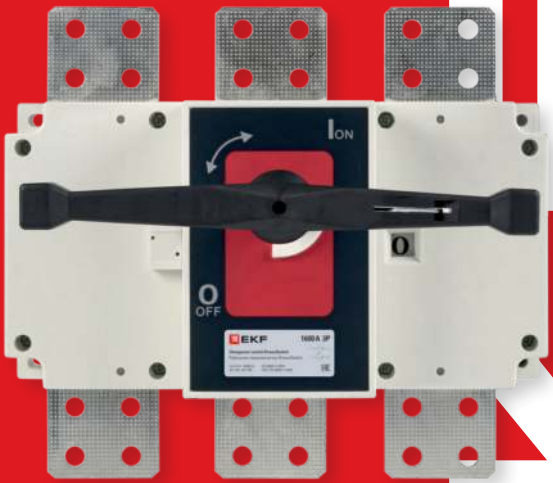

TECHNICAL MANUAL

Switch disconnectors

160-4000 A PowerSwitch EKF

1 DESCRIPTION

Switch disconnectors PowerSwitch EKF are used in three-phase 50/60 Hz AC networks with rated voltage up to 660 V for manual switching in electrical distribution panels.

The mechanism of switch disconnector provides instantaneous (13.8 m/s) contact opening regardless of handle travel speed.

The housing, made of unsaturated glass fiber reinforced polyester resin, has excellent dielectric, flame-, CO2-, and impact-resistance properties, ensuring safe operation of the product when used as intended.

Switch disconnectors ensure double break at each pole.

Silver-coated copper alloy contact surfaces ensure large insulation gap.

A mechanical lockout feature is available to prevent accidental handle operation. The switch disconnectors PowerSwitch over 250 A can be complemented with auxiliary NO/NC contact.

TYPE CODE

Switch disconnector X X PowerSwitch EKF

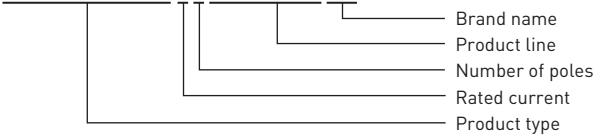

2 TECHNICAL DATA

The main specifications are listed in Table 1.

Table 1 – Technical data of Switch disconnectors 160 A – 4000 A EKF

Characteristics			Values				
Rated thermal current Ith, A			100	160	250	630	630
Rated current In, A			100	160	250	400	630
Rated insulation voltage Ui, V			690	1000	1000	1000	1000
Insulation dielectric strength, V			1890	160	2200	2200	2200
Rated impulse withstand voltage Uimp, kV			8	12	12	12	12
Rated operating current Ie, A	380-415 V	AC-21B	100	160	250	400	630
		AC-22B	100	160	250	400	630
		AC-23B	100	160	250	400	630
	660 V	AC-21B	100	160	250	400	500
		AC-22B	50	160	160	315	315
		AC-23B	40	80	125		
Motor power P, kW	380-415 V		40	80	132	220	315
	660 V		33	75	110	185	185

Characteristics		Values				
Rated short-time withstand current Icw, kA		2	6	9	12,6	12,6
Rated breaking capacity Icn, A		150	1080	2000	3200	5040
Rated making capacity Icm, A		150	1600	2500	4000	6300
Short-circuit current, kA		2,84	9,2	15,3	25,2	25,2
Mechanical endurance at 380-415 V, O-C cycles		1700	1400	1400	800	800
Electrical endurance at 380-415 V, O-C cycles		300	200	200	200	200
Applied force on operating handle, N*m		1,2	6,5	10	21	21
Weight, kg	3 poles	0,55	1,2	2	4,3	4,7
	4 poles	0,62	1,5	2,35	5,4	6,3
Operating temperature, °C		-45 to +50				

Rated thermal current Ith, A			1600	1600	1600	3150	3150	3150	4000
Rated current In, A			1000	1250	1600	2000	2500	3150	4000
Rated insulation voltage Ui, V			1000						
Insulation dielectric strength, V			2200						
Rated impulse withstand voltage Uimp, kV			12						
Rated operating current Ie, A	380-415 V	AC-21B	1000	1250	1600	2000	2500	3150	4000
		AC-22B	1000	1250	1600	1000	1250		
	660 V	AC-21B	1000	1000	1600	2000	2500	3150	
		AC-22B	800	800	800	750			
Motor power P, kW	380-415 V		560	560	560	710	710	710	
	660 V		475	475	475	750	750	750	
Rated short-time withstand current Icw, kA			30	30	30	50	50	50	50
Rated breaking capacity Icn, A			1500	1875	2400	3000	3750	4725	5000
Rated making capacity Icm, A			1500	1875	2400	3000	3750	4725	5000
Short-circuit current, kA			63	63	63	105	105	105	176
Mechanical endurance at 380-415 V, O-C cycles			500	500	500	300	300	300	300
Electrical endurance at 380-415 V, O-C cycles			100						
Applied force on operating handle, N*m			37	37	60	60	60	60	70
Weight, kg	3 poles		13,2	13,2	15,6	25,5	25,5	31	38,5
	4 poles		14,8	17,1	18	37,5	37,5	51,5	67
Operating temperature, °C			-45 to +50						

Switch disconnectors comply with:

– IEC 60947-1 Low-voltage switchgear and controlgear – Part 1: General rules.

– IEC 60947-3 Low-voltage switchgear and controlgear – Part 3: Switches, disconnectors, switch-disconnectors and fuse-combination units.

Switch disconnector is operated manually using a rotary handle. The switch disconnector housing features windows for visual inspection of the contact positions.

The rotary handle for operating the switch disconnector within the enclosure is included in the delivery. Additionally, an external handle is provided for operating the switch disconnector through the enclosure door.

The external handle can be installed either directly to the enclosure door or using an extension shaft.

3 OVERALL AND INSTALLATION DIMENSIONS

For appearance and dimensions of switch disconnectors, refer to Figures 1-6.

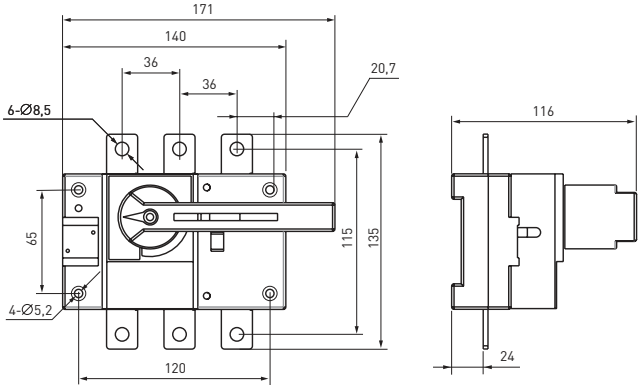

Figure 1a - Installation dimensions of 160 A 3P models

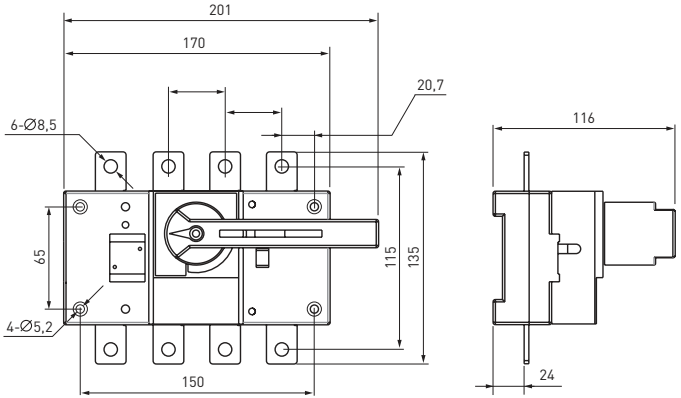

Figure 1b - Installation dimensions of 160 A 4P models

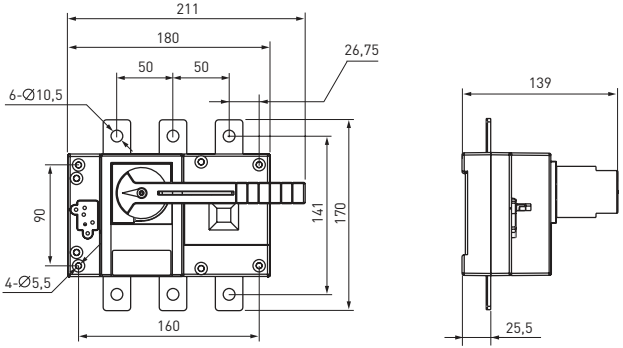

Figure 2a - Installation dimensions of 250 A 3P models

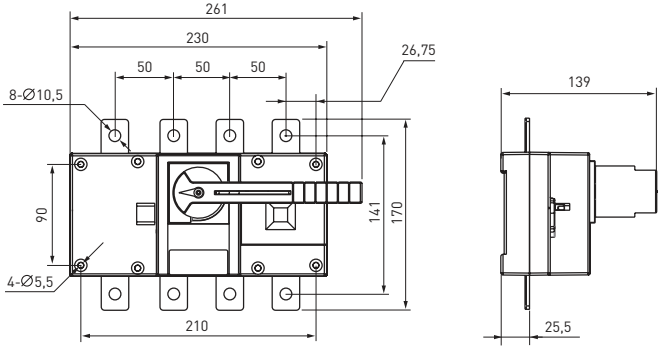

Figure 2b – Installation dimensions of 250 A 4P models

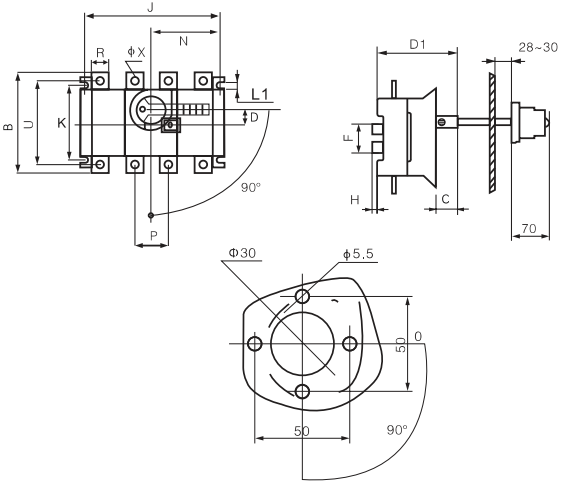

Figure 3 – Installation dimensions of 400-630 A models

Table 2 – Installation dimensions of PowerSwitch 400-630 A

Specification	**Overall dimensions**												**Installation dimensions**		
In	A	B	C	D	D1	N	P	R	U	ØX	F	H	J	K	L1
400A/3	230	240	20	30	137	135	65	32	206	11	95	20	210	135	11
400A/4	290	240	20	30	137	135	65	32	206	11	95	20	210	135	11
630A/3	230	260	20	30	137	135	65	40	220	13	95	20	210	135	11
630A/4	290	260	20	30	137	135	65	40	220	13	95	20	210	135	11

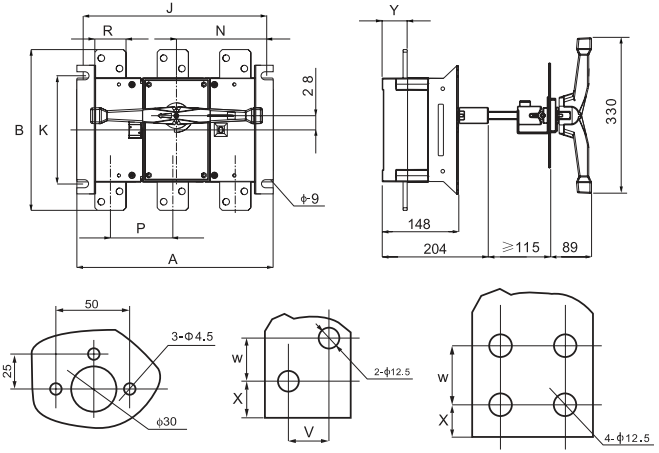

Figure 4 – Installation dimensions of 1000-1600 A models

Table 3 –Installation dimensions of PowerSwitch 1000-1600 A

Specification	**Overall dimensions**									**Installation dimensions**	
In	A	B	N	P	R	V	W	X	Y	J	K
1000A/3	378	308	174	120	60	35	20	16,5	49	350	220
1000A/4	493	310	235	120	60	40	35	16	48	471	220
1250A/3	378	336	174	120	80	40	35	16	49	350	220
1250A/4	493	338	235	120	80	40	35	16	48	471	220
1600A/3	378	336	174	120	80	40	35	16	50	350	220
1600A/4	493	338	235	120	80	40	35	16	49	471	220

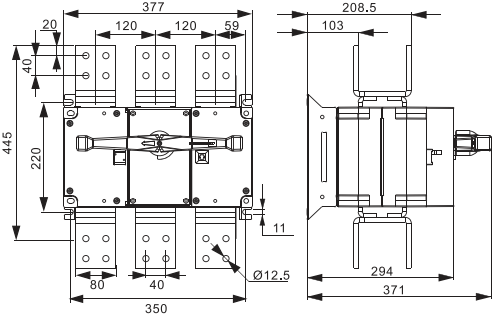

Figure 5a - Installation dimensions of 2000 A 3P models

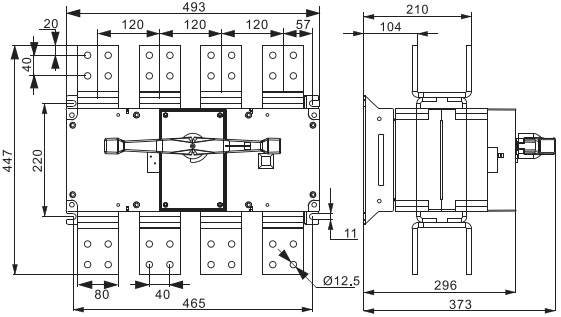

Figure 5b - Installation dimensions of 2000 A 4P models

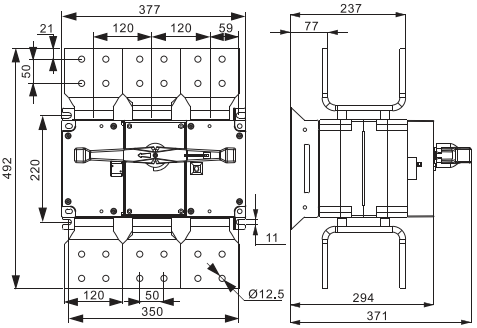

Figure 6a - Installation dimensions of 2500 A 3P models

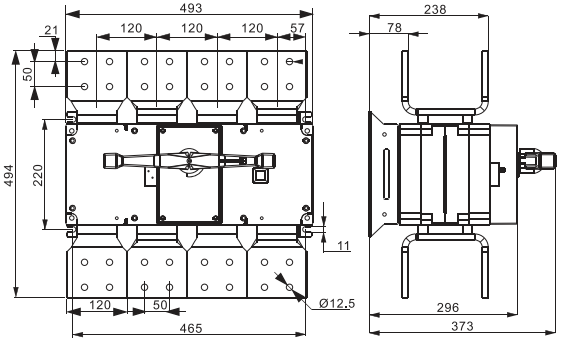

Figure 6b - Installation dimensions of 2500 A 4P models

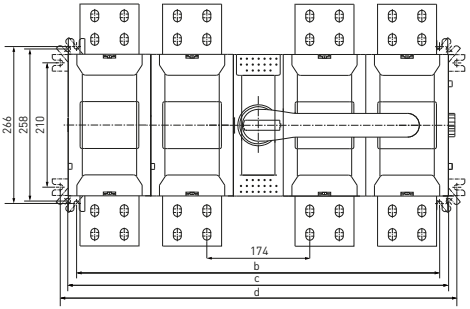

Figure 7 – Installation dimensions of 4000 A models

Table 4 – Installation dimensions of PowerSwitch 4000 A

Dimensions, mm	**a**	**b**	**c**	**d**
3150A/4, 4000A/4	656	615	646	672

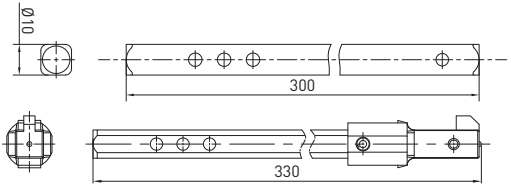

Figure 8a – Extension shaft overall dimensions for 160-630 A models

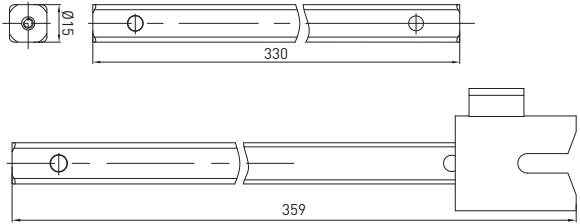

Figure 8b – Extension shaft overall dimensions for 800-3150A models

4 WIRING DIAGRAM

For wiring diagram of switch disconnectors, refer to Figure 9.

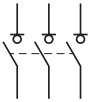

Figure 9

5 INSTALLATION

The switch disconnectors must be mounted and connected by qualified electrical personnel. Switches are installed onto the mounting panel. For operating position of switch disconnectors, refer to Figures 10a, 10b and 10c.

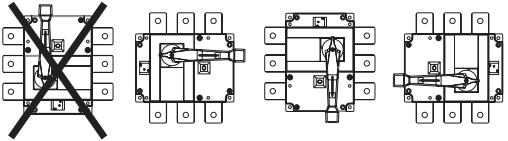

Figure 10a – Operating position of 160-630 A models

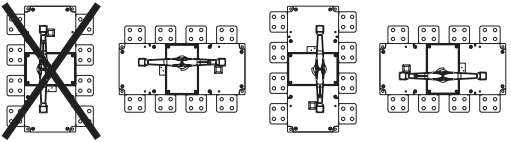

Figure 10b – Operating position of 1000-2500 A models

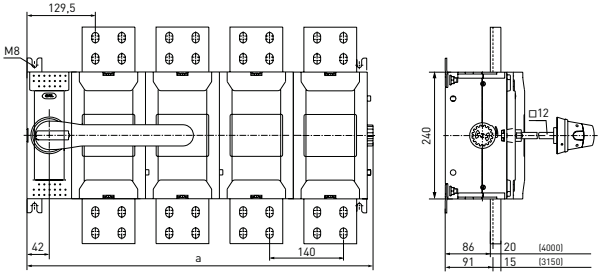

Figure 10c – Operating position of 4000 A models

Before installation of the switch disconnector, make sure:

– The switch disconnector complies with intended purpose.

– There is no visible damage.

For handle direct mounting to the switch disconnector and lockout, refer to Figures 11, 12, 13.

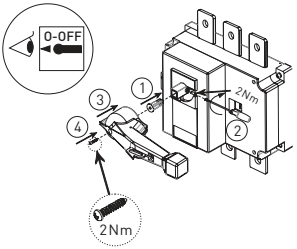

Figure 11a – Handle direct mounting to 160-630 A models

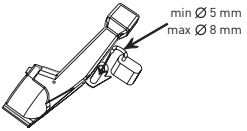

Figure 11b – Handle padlocking for 160-630 A models

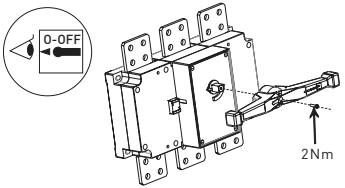

Figure 12a – Handle direct mounting to 1000-1600 A models

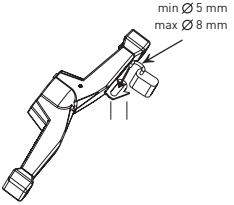

Figure 12b – Handle padlocking for 1000-1600 A models

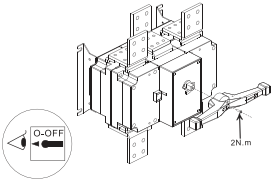

Figure 13a – Handle direct mounting to 2000-4000 A models

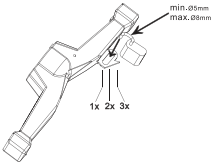

Figure 13b – Handle padlocking for 2000-4000 A models

For external handle mounting to an enclosure door, refer to Figures 14, 14, and 16.

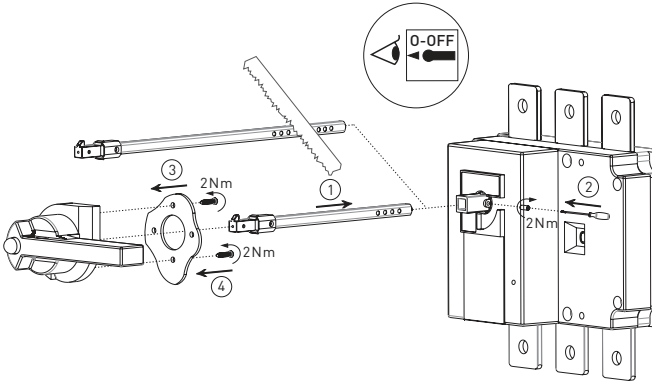

Figure 14a – External handle mounting for 160-630 A models

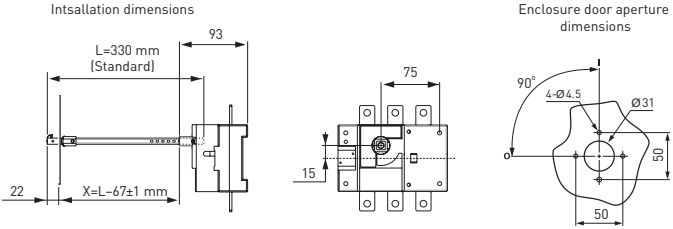

Figure 14b - Installation dimensions. Enclosure door mount. 160 A models

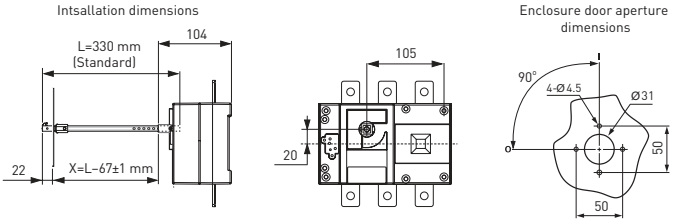

Figure 14c – Installation dimensions. Enclosure door mount. 250 A models

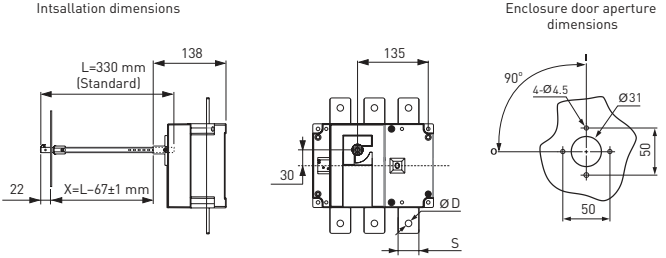

Figure 14d – Installation dimensions. Enclosure door mount. 400-630 A models

Table 5 – Legend

Dimensions, mm	S	D
PowerSwitch 400 A	31,5	11
PowerSwitch 630 A	40	13

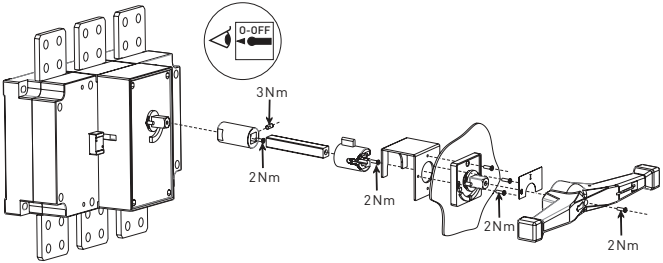

Figure 15a – External handle mounting for 1000-1600 A models

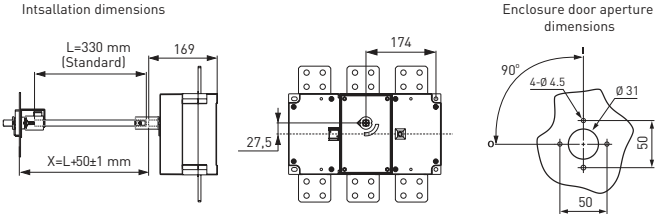

Figure 15b - Installation dimensions. Enclosure door mount. 400-630 A models

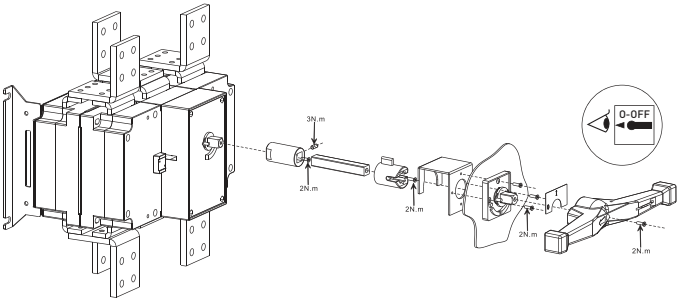

Figure 16a – External handle mounting for 2000-2500 A models

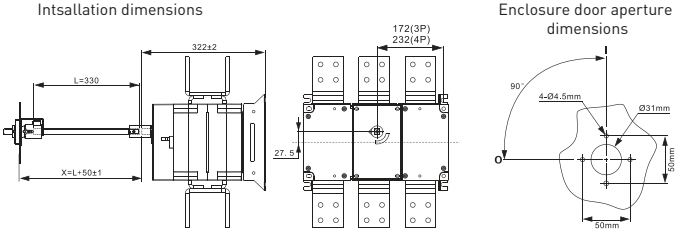

Figure 16b - Installation dimensions. Enclosure door mount. 2000-2500 A models

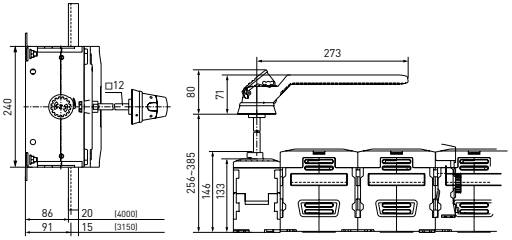

Figure 16c - Installation dimensions. Enclosure door mount. 3150-4000 A models

6 OPERATION

Make sure the power is off before installation and maintenance!

Under normal operating conditions, visually inspect the switch disconnectors once a year and after every short circuit.

During inspection:

– Remove dust and grease;

– Tighten the screws;

– Switch the device on/off without loads.

Do not touch terminals and non-insulated live conductors when operating the device.

7 OPERATION CONDITIONS

The switch disconnectors shall be stored indoors in the original package at the ambient temperature from -45°C to +50°C and relative humidity of max. 95%.

Altitude above sea level shall not exceed 2000 m.

Do not operate switch disconnectors in corrosive environment.

Do not operate the switch disconnectors in Ex-zone!

8 DELIVERY SCOPE

The switch disconnectors are supplied in a group package. For all available documentation, scan the QR-code on the insert or on the inside of the package.

The PowerSwitch 3150A and 4000A package includes an extension shaft and an external handle.

9 STORAGE AND TRANSPORTATION

Switch disconnectors can be transported by any means of enclosed transport that protects the packaged goods from mechanical impact and weather exposure.

The switch disconnectors shall be stored indoors in the original package at the ambient temperature from -45°C to 50°C and relative humidity of max. 50% at +40°C.

10 DISPOSAL

Life-expired and failed switch disconnectors shall be disposed of in compliance with the national and local laws and regulations in force. To dispose of the device, send it to an authorized company for recycling in compliance with the effective national and local laws and regulations.

11 MANUFACTURER'S WARRANTY

Warranty period: 7 years from the date of sale specified in the sales receipt.

Shelf life: 7 years from the date of manufacture specified on the product package or housing.

Service life: 10 years.

Manufacturer: OOO Electroresheniya, Otradnaya st., 2b/9, 127273, Moscow, Russia, tel. +7 (495) 788-88-15.

MEA regional headquarters: EKF ELECTRICAL SOLUTION FZCO, Techno Hub-2, DSO, P. O. box 341079, Dubai, United Arab Emirates, tel. +971-4-547-06-18.

Importer and EKF trademark service representative in the territory of the Republic of Kazakhstan: TOO «Energoresheniya Kazakhstan», Kazakhstan, Almaty, Bostandyk district, Turgut Ozal st., 247, apt 4.

12 CERTIFICATE OF ACCEPTANCE

The switch disconnectors PowerSwitch EKF have been manufactured in compliance with laws and regulations in force and have been approved for operation.

Date of manufacture: for information, refer to the product package.

Quality control stamp. OTK 1

v3

ekfgroup.com